NSPT New Standard Power Transmission

Taper Bore Poly-V Sheaves STL

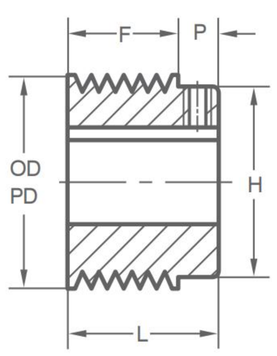

TYPE 1

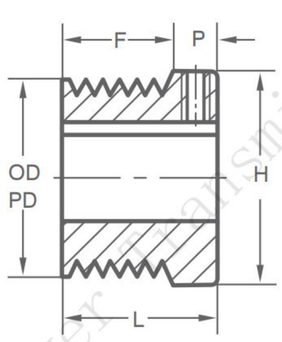

TYPE 2

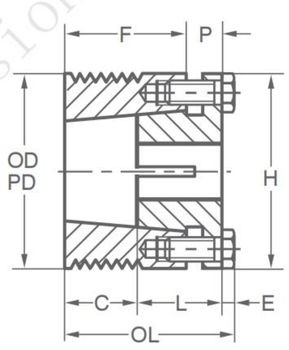

TYPE 3

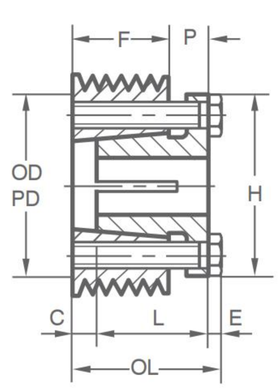

TYPE 4

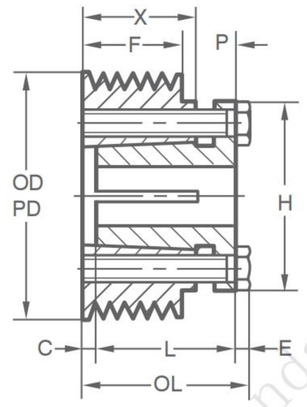

TYPE 5

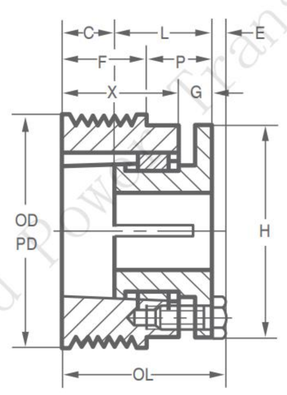

TYPE 2B

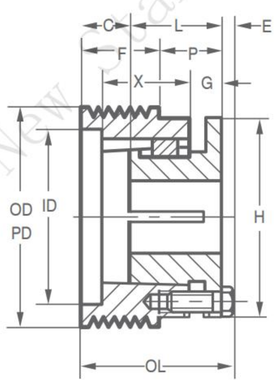

TYPE 3B

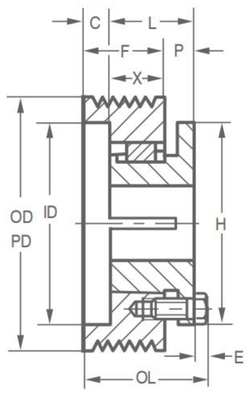

TYPE 5B

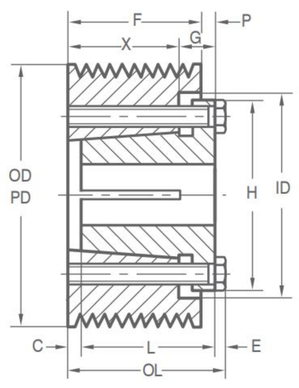

TYPE 6

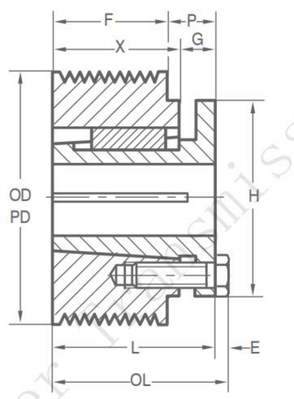

TYPE 7

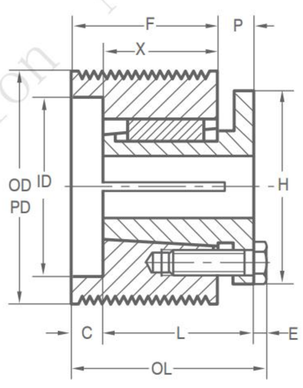

TYPE 8

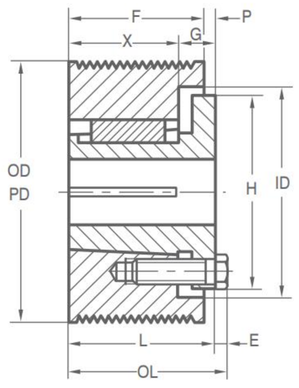

TYPE 9

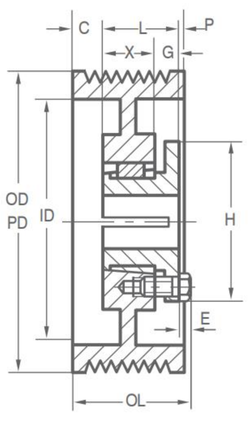

TYPE 6W

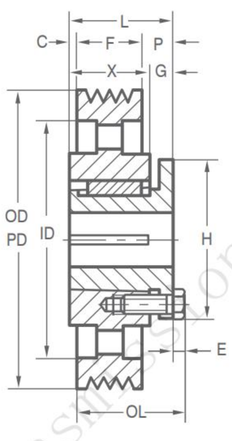

TYPE 7A

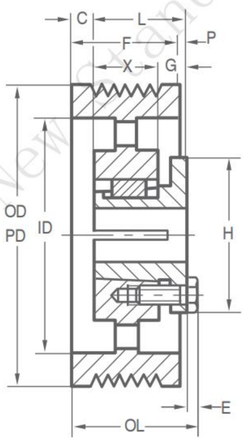

TYPE 4A

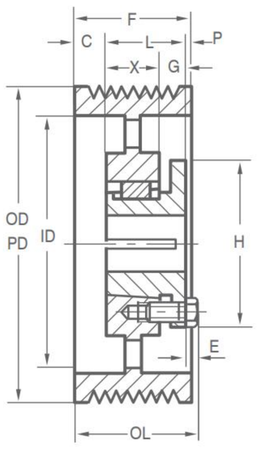

TYPE 5A

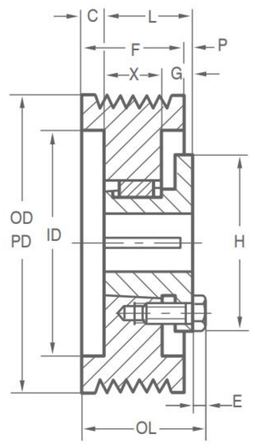

TYPE 4S

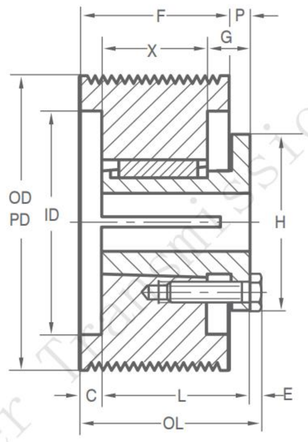

TYPE 3S

J–L–M

Covss Section		No.of Grooves	Pitch Diameter	Bore Range*	Belt Pitch Lengths
J	3/32"Rib Spacing	4,6	1.25-1.90"	FB3/8-1"	18.0-98.0"
		4,6 10,16	2.00-10.60	3/8-2 11/16	
L	3/8"Rib Spacing	6,8,10,12 14,16,20	3.00-30.00	1/2-3 3/4	50.0-145.5
M	3/8"Rib Spacing	6,8,10,12, 14,16,20	7.00-44.00	3/4-4 1/4	90.0-198.0

"FB=Finished Bore. Others are bushing type.

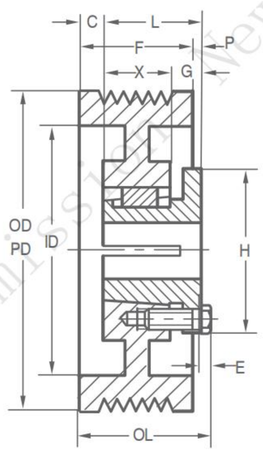

TYPE 4W

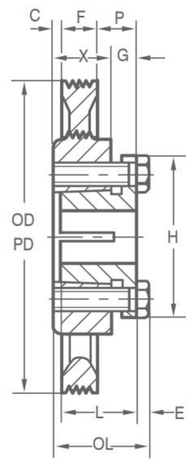

TYPE 10

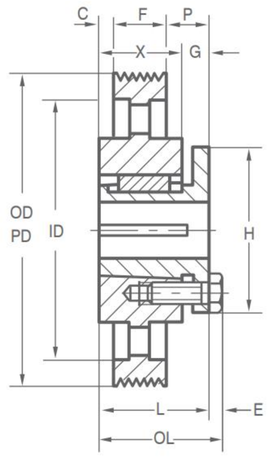

TYPE 2A

Taper Bore Poly-V Sheaves STL

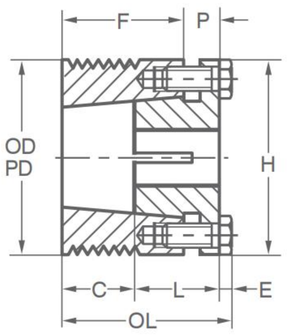

TYPE 3

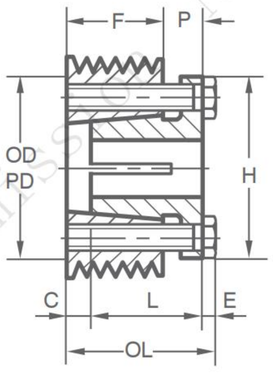

TYPE 4

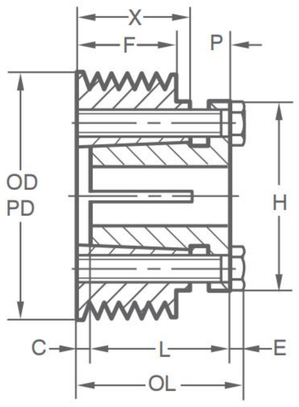

TYPE 5

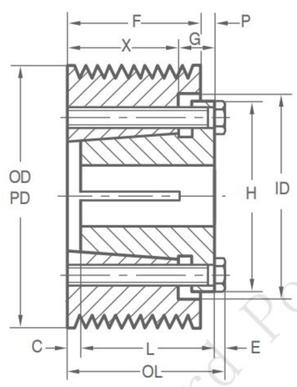

TYPE 6

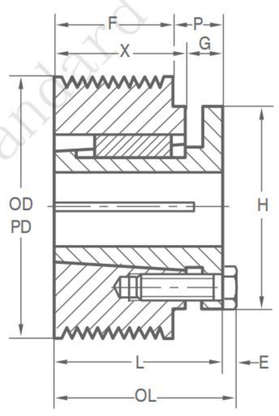

TYPE 7

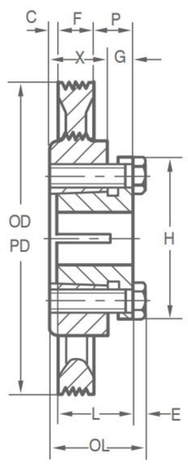

TYPE 10

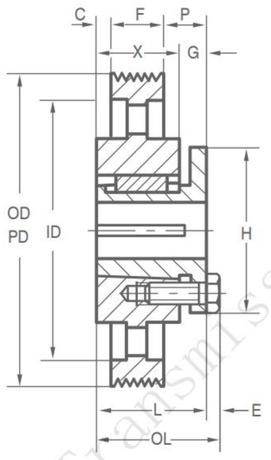

TYPE 2A

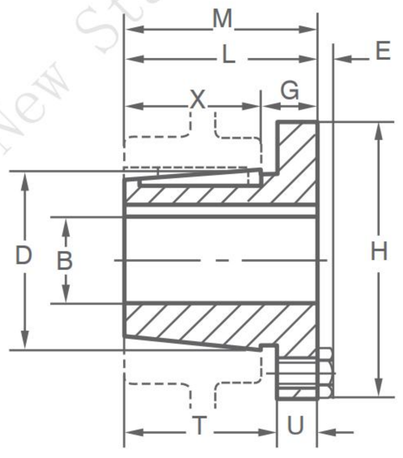

J6 Specifications--Stock "J" Sheaves

PART NO.	Diameters		Bush	Type	Dimensions										Wt Less Bush
	OD	PD			ID	OL	F	L	P	C	H	G	X	E	
6J20G	2.00	2.00	G	3	—	1 7/8	1 1/4	1	7/16	11/16	2	—	—	3/16	0.8
6J21G	2.12	2.12	G	4	—	1 3/8	3/4	1	7/16	3/16	2	—	—	3/16	0.7
6J22G	2.24	2.24	G	4	—	1 3/8	3/4	1	7/16	3/16	2	—	—	3/16	0.8
6J23G	2.36	2.36	G	4	—	1 3/8	3/4	1	7/16	3/16	2	—	—	3/16	0.9
6J25G	2.50	2.50	G	6	2 1/16	1 1/4	3/4	1	5/16	1/16	2	7/16	5/8	3/16	0.7
6J26G	2.65	2.65	G	6	2 1/8	1 1/4	3/4	1	5/16	1/16	2	7/16	5/8	3/16	0.8
6J28G	2.80	2.80	G	6	2 1/4	1 1/4	3/4	1	5/16	1/16	2	7/16	5/8	3/16	0.9
6J30H	3.00	3.00	H	5	—	1 1/2	3/4	1 1/4	9/16	1/16	2 1/2	7/16	7/8	3/16	1.2
6J31H	3.15	3.15	H	5	—	1 1/2	3/4	1 1/4	9/16	1/16	2 1/2	7/16	7/8	3/16	1.9
6J33H	3.35	3.35	H	5	—	1 1/2	3/4	1 1/4	9/16	1/16	2 1/2	7/16	7/8	3/16	2.1
6J45P	4.50	4.50	P_1	7	—	2 3/16	3/4	1 15/16	1 3/16	—	3	5/8	1 5/16	1/4	3.1
6J60P	6.00	6.00	P_1	10	5 1/4	2 3/16	3/4	1 15/16	29/32	9/32	3	5/8	1 5/16	1/4	4.7
6J80P	8.00	8.00	P_1	10	7	2 3/16	3/4	1 15/16	29/32	9/32	3	5/8	1 5/16	1/4	6.6
6J106P	10.60	10.60	P_1	2A	9 7/16	2 3/16	3/4	1 15/16	29/32	9/32	3	5/8	1 5/16	1/4	9.3
6J140Q	14.00	14.00	Q_1	2A	12 3/16	2 25/32	3/4	2 1/2	1 1/4	1/2	4 1/8	3/4	1 3/4	9/32	13.6
6J190Q	19.00	19.00	Q_1	2A	18 1/4	2 25/32	3/4	2 1/2	1 1/4	1/2	4 1/8	3/4	1 3/4	9/32	19.8

STL Bore Range

Bushing	Bore Range
G	3/8"-1"
H	3/8-1 1/2
P_1	1/2-1 3/4
Q_1	3/4-2 11/16

Standard Keyseats

Bore Range	Keyseat	Bore Range	Keyseat
3/8" & 7/16"	None	1 5/16" & 1 3/8"	5/16" x 5/32"
1/2 & 9/16	1/8" x 1/16"	1 7/16-1 3/4	3/8 x 3/16
5/8-7/8	3/16 x 3/32	1 13/16-2 1/4	1/2 x 1/4
15/16-1 1/4	1/4 x 1/8	2 5/16-2 11/16	5/8 x 5/16

1 3/8" Bore Bushings also available with 3/8"x3/16" Keyseat.

Taper Bore Poly-V Sheaves STL

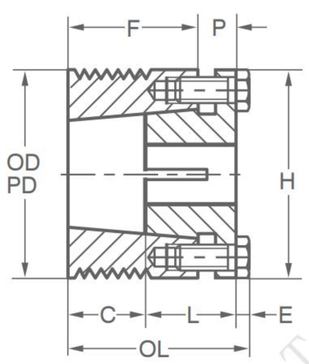

TYPE 3

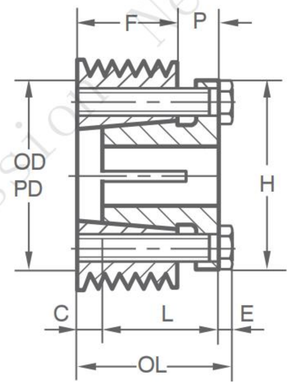

TYPE 4

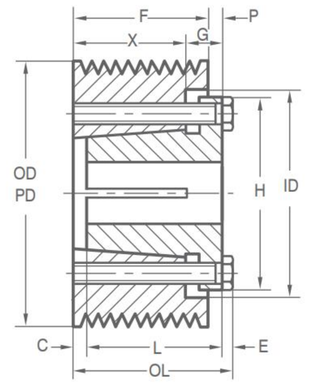

TYPE 6

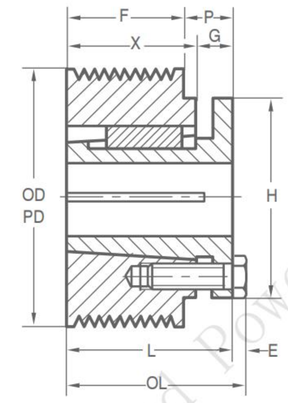

TYPE 7

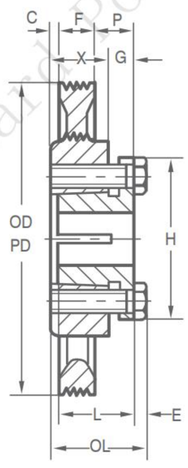

TYPE 10

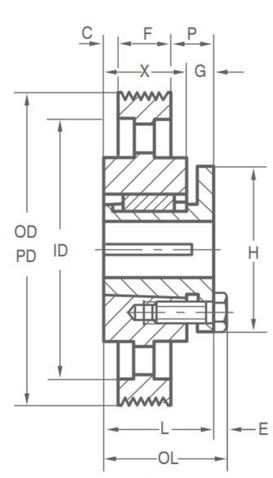

TYPE 2A

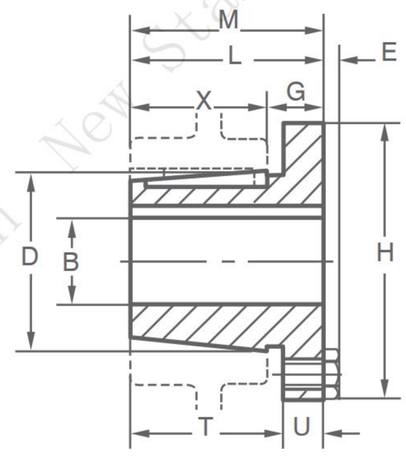

J10 Specifications--Stock "J" Sheaves

PART NO.	Diameters		Bush	Type	Dimensions										Wt Less Bush
	OD	PD			ID	OL	F	L	P	C	H	G	X	E	
10J20G	2.00	2.00	G	3	—	2 1/4	1 5/8	1	7/16	1 1/16	2	—	—	3/16	1.0
10J21G	2.12	2.12	G	4	—	1 3/4	1 1/8	1	7/16	9/16	2	—	—	3/16	0.8
10J22G	2.24	2.24	G	4	—	1 3/4	1 1/8	1	7/16	9/16	2	—	—	3/16	0.9
10J23G	2.36	2.36	G	4	—	1 3/4	1 1/8	1	7/16	9/16	2	—	—	3/16	1.0
10J25G	2.50	2.50	G	6	2 1/16	1 5/16	1 1/8	1	—	1/8	2	7/16	11/16	3/16	0.9
10J26G	2.65	2.65	G	6	2 1/8	1 5/16	1 1/8	1	—	1/8	2	7/16	11/16	3/16	1.1
10J28G	2.80	2.80	G	6	2 1/4	1 5/16	1 1/8	1	—	1/8	2	7/16	11/16	3/16	1.3
10J30H	3.00	3.00	H	6	2 9/16	1 1/2	1 1/8	1 1/4	3/16	1/16	2 1/2	7/16	7/8	3/16	1.5
10J31H	3.15	3.15	H	6	2 5/8	1 1/2	1 1/8	1 1/4	3/16	1/16	2 1/2	7/16	7/8	3/16	1.6
10J33P	3.35	3.35	P1	7	—	2 3/16	1 1/8	1 15/16	13/16	—	3	5/8	1 5/16	1/4	1.9
10J45P	4.50	4.50	P1	7	—	2 3/16	1 1/8	1 15/16	13/16	—	3	5/8	1 5/16	1/4	4.0
10J60P	6.00	6.00	P1	10	5 1/4	2 3/16	1 1/8	1 15/16	23/32	3/32	3	5/8	1 5/16	1/4	5.4
10J80P	8.00	8.00	P1	10	7	2 3/16	1 1/8	1 15/16	23/32	3/32	3	5/8	1 5/16	1/4	11.8
10J106Q	10.60	10.60	Q1	2A	9 7/16	2 25/32	1 1/8	2 1/2	1 1/16	5/16	4 1/8	3/4	1 3/4	9/32	13.1
10J140Q	14.00	14.00	Q1	2A	12 3/16	2 25/32	1 1/8	2 1/2	1 1/16	5/16	4 1/8	3/4	1 3/4	9/32	16.8
10J190Q	19.00	19.00	Q1	2A	18 1/4	2 25/32	1 1/8	2 1/2	1 1/16	5/16	4 1/8	3/4	1 3/4	9/32	22.0

STL Bore Range

Bushing	Bore Range
G	3/8"-1"
H	3/8-1 1/2
P1	1/2-1 3/4
Q1	3/4-2 11/16

Standard Keyseats

Bore Range	Keyseat	Bore Range	Keyseat
3/8" & 7/16"	None	1 5/16" & 1 3/8"	5/16" x 5/32"
1/2 & 9/16	1/8" x 1/16"	1 7/16-1 3/4	3/8 x 3/16
5/8-7/8	3/16 x 3/32	1 13/16-2 1/4	1/2 x 1/4
15/16-1 1/4	1/4 x 1/8	2 5/16-2 11/16	5/8 x 5/16

1 3/8" Bore Bushings also available with 3/8"x3/16" Keyseat.

Taper Bore Poly-V Sheaves STL

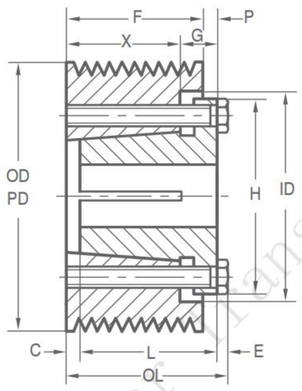

TYPE 6

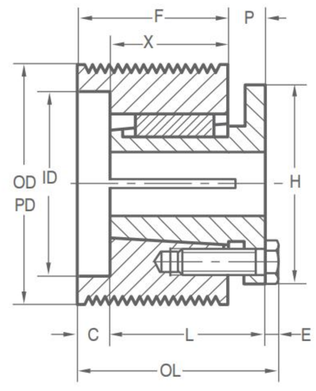

TYPE 8

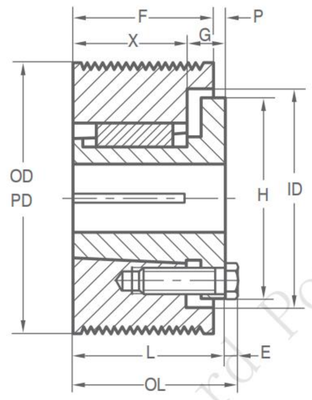

TYPE 9

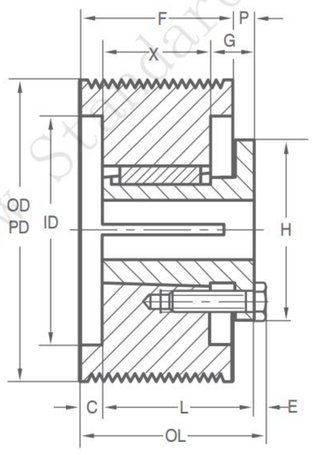

TYPE 3S

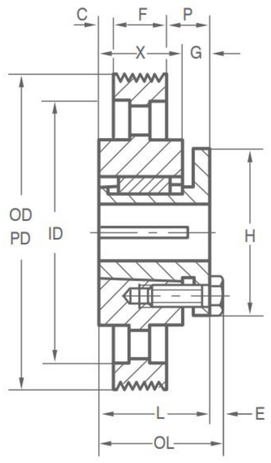

TYPE 2A



J16 Specifications--Stock "J" Sheaves

PART NO.	Diameters		Bush	Type	Dimensions										Wt Less Bush
	OD	PD			ID	OL	F	L	P	C	H	G	X	E	
16J25G	2.50	2.50	G	6	2 1/16	1 27/32	1 21/32	1	—	21/32	2	7/16	1 7/32	3/16	1.5
16J26G	2.65	2.65	G	6	2 1/8	1 27/32	1 21/32	1	—	21/32	2	7/16	1 7/32	3/16	1.8
16J28G	2.80	2.80	G	6	2 1/4	1 27/32	1 21/32	1	—	21/32	2	7/16	1 7/32	3/16	2.0
16J30H	3.00	3.00	H	6	2 9/16	1 27/32	1 21/32	1 1/4	—	13/32	2 1/2	7/16	1 7/32	3/16	2.1
16J31H	3.15	3.15	H	6	2 5/8	1 27/32	1 21/32	1 1/4	—	13/32	2 1/2	7/16	1 7/32	3/16	2.3
16J33P	3.35	3.35	P1	8	2 13/16	2 17/32	1 21/32	1 15/16	5/8	11/32	3	—	1 5/16	1/4	2.5
16J45P	4.50	4.50	P1	9	3 3/4	2 3/16	1 21/32	1 15/16	9/32	—	3	5/8	1 5/16	1/4	5.2
16J60P	6.00	6.00	P1	3S	5 1/4	2 23/64	1 21/32	1 15/16	29/64	11/64	3	5/8	1 5/16	1/4	6.7
16J80Q	8.00	8.00	Q1	2A	7	2 25/32	1 21/32	2 1/2	51/64	3/64	4 1/8	3/4	1 3/4	9/32	13.5
16J106Q	10.60	10.60	Q1	2A	9 7/16	2 25/32	1 21/32	2 1/2	51/64	3/64	4 1/8	3/4	1 3/4	9/32	15.4
16J140Q	14.00	14.00	Q1	2A	12 3/16	2 25/32	1 21/32	2 1/2	51/64	3/64	4 1/8	3/4	1 3/4	9/32	18.7
16J190Q	19.00	19.00	Q1	2A	18 1/4	2 25/32	1 21/32	2 1/2	51/64	3/64	4 1/8	3/4	1 3/4	9/32	27.4

STL Bore Range

Bushing	Bore Range
G	3/8"-1"
H	3/8-1 1/2
P1	1/2-1 3/4
Q1	3/4-2 11/16

Standard Keyseats

Bore Range	Keyseat	Bore Range	Keyseat
3/8" & 7/16"	None	1 5/16" & 1 3/8"	5/16" x 5/32"
1/2 & 9/16	1/8" x 1/16"	1 7/16-1 3/4	3/8 x 3/16
5/8-7/8	3/16 x 3/32	1 13/16-2 1/4	1/2 x 1/4
15/16-1 1/4	1/4 x 1/8	2 5/16-2 11/16	5/8 x 5/16

1 3/8" Bore Bushings also available with 3/8"x3/16" Keyseat.

Taper Bore Poly-V Sheaves STL

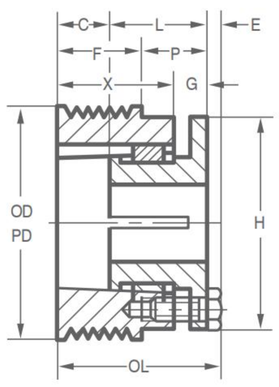

TYPE 2B

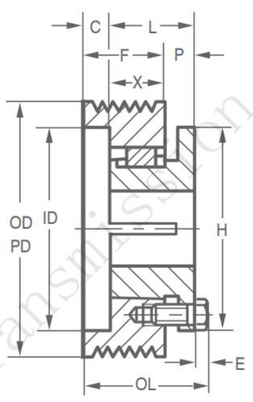

TYPE 5B

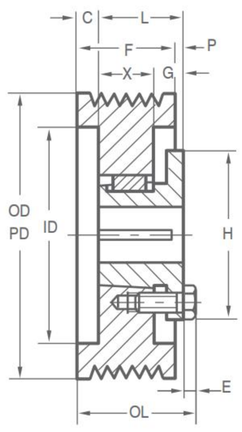

TYPE 4S

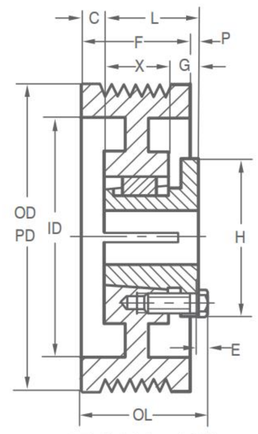

TYPE 4W

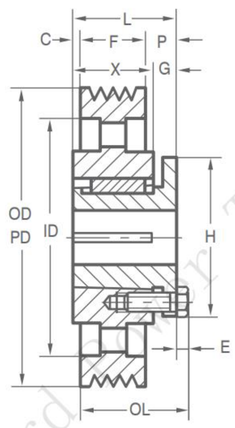

TYPE 7A

L6 Specifications--Stock "L" Sheaves

PART NO.	Diameters		Bush	Type	Dimensions										Wt Less Bush
	OD	PD			ID	OL	F	L	P	C	H	G	X	E	
6L30P	3.00	3.00	P1	2B	-	3 1/8	1 11/16	1 15/16	1 3/16	15/16	3	5/8	2 1/4	1/4	2.1
6L32P	3.20	3.20	P1	2B	-	3 1/8	1 11/16	1 15/16	1 3/16	15/16	3	5/8	2 1/4	1/4	2.8
6L34P	3.40	3.40	P1	5B	2 1/2	2 9/16	1 11/16	1 15/16	5/8	3/8	3	—	1 5/16	1/4	2.1
6L36P	3.60	3.60	P1	5B	2 11/16	2 9/16	1 11/16	1 15/16	5/8	3/8	3	—	1 5/16	1/4	2.6
6L38P	3.80	3.80	P1	5B	2 7/8	2 9/16	1 11/16	1 15/16	5/8	3/8	3	—	1 5/16	1/4	2.8
6L40P	4.00	4.00	P1	5B	3 1/16	2 9/16	1 11/16	1 15/16	5/8	3/8	3	—	1 5/16	1/4	3.4
6L42P	4.20	4.20	P1	4S	3 1/4	2 3/16	1 11/16	1 15/16	1/4	—	3	5/8	1 5/16	1/4	3.9
6L44P	4.40	4.40	P1	4S	3 1/2	2 3/16	1 11/16	1 15/16	1/4	—	3	5/8	1 5/16	1/4	4.3
6L46P	4.60	4.60	P1	4S	3 11/16	2 3/16	1 11/16	1 15/16	1/4	—	3	5/8	1 5/16	1/4	4.8
6L48P	4.80	4.80	P1	4S	3 7/8	2 3/16	1 11/16	1 15/16	1/4	—	3	5/8	1 5/16	1/4	5.1
6L50P	5.00	5.00	P1	4W	4 1/16	2 3/16	1 11/16	1 15/16	1/4	—	3	5/8	1 5/16	1/4	5.8
6L52P	5.20	5.20	P1	4W	4 1/4	2 3/16	1 11/16	1 15/16	1/4	—	3	5/8	1 5/16	1/4	6.5
6L54P	5.40	5.40	P1	4W	4 1/2	2 3/16	1 11/16	1 15/16	1/4	—	3	5/8	1 5/16	1/4	7.0
6L56P	5.60	5.60	P1	4W	4 11/16	2 3/16	1 11/16	1 15/16	1/4	—	3	5/8	1 5/16	1/4	7.5
6L58P	5.80	5.80	P1	4W	4 7/8	2 3/16	1 11/16	1 15/16	1/4	—	3	5/8	1 5/16	1/4	8.1
6L60P	6.00	6.00	P1	4W	5 1/16	2 3/16	1 11/16	1 15/16	1/4	—	3	5/8	1 5/16	1/4	8.3
6L62P	6.20	6.20	P1	4W	5 1/4	2 3/16	1 11/16	1 15/16	1/4	—	3	5/8	1 5/16	1/4	8.8
6L64P	6.40	6.40	P1	4W	5 1/2	2 3/16	1 11/16	1 15/16	1/4	—	3	5/8	1 5/16	1/4	9.0
6L70Q	7.00	7.00	Q1	7A	5 9/16	2 25/32	1 11/16	2 1/2	25/32	1/32	4 1/8	3/4	1 3/4	9/32	9.9
6L74Q	7.40	7.40	Q1	7A	6	2 25/32	1 11/16	2 1/2	25/32	1/32	4 1/8	3/4	1 3/4	9/32	10.8
6L80Q	8.00	8.00	Q1	7A	6 9/16	2 25/32	1 11/16	2 1/2	25/32	1/32	4 1/8	3/4	1 3/4	9/32	12.0
6L90Q	9.00	9.00	Q1	7A	7 7/8	2 25/32	1 11/16	2 1/2	25/32	1/32	4 1/8	3/4	1 3/4	9/32	14.1
6L100Q	10.00	10.00	Q1	7A	7 15/16	2 25/32	1 11/16	2 1/2	25/32	1/32	4 1/8	3/4	1 3/4	9/32	16.1
6L120Q	12.00	12.00	Q1	7A	11	2 25/32	1 11/16	2 1/2	25/32	1/32	4 1/8	3/4	1 3/4	9/32	22.0
6L140Q	14.00	14.00	Q1	7A	12 1/8	2 25/32	1 11/16	2 1/2	25/32	1/32	4 1/8	3/4	1 3/4	9/32	27.8
6L160Q	16.00	16.00	Q1	7A	14 9/16	2 25/32	1 11/16	2 1/2	25/32	1/32	4 1/8	3/4	1 3/4	9/32	30.9
6L180Q	18.00	18.00	Q1	7A	16 7/8	2 25/32	1 11/16	2 1/2	25/32	1/32	4 1/8	3/4	1 3/4	9/32	36.9
6L200Q	20.00	20.00	Q1	7A	18 1/2	2 25/32	1 11/16	2 1/2	25/32	1/32	4 1/8	3/4	1 3/4	9/32	38.6
6L240Q	24.00	24.00	Q1	7A	22 3/16	2 25/32	1 11/16	2 1/2	25/32	1/32	4 1/8	3/4	1 3/4	9/32	47.5
6L300Q	30.00	30.00	Q1	7A	28 1/2	2 25/32	1 11/16	2 1/2	25/32	1/32	4 1/8	3/4	1 3/4	9/32	83.0

STL Bushing Dimensions

Part No.	Dimensions									Bore Range	Wt Lbs.
	M	L	G	X	E	T	U	D	H		
P1	2 3/16"	1 5/16"	5/8"	1 5/16"	1/4"	1 17/32"	13/32"	1 15/16"	3"	1/2" - 1 3/4"	1 1/4
P2	3 3/16	2 5/16	5/8	2 5/16	1/4	2 17/32	13/32	1 15/16	3	3/4 - 1 3/4	1 1/2
Q1	3 25/32	2 1/2	3/4	1 3/4	9/32	1 31/32	17/32	2 7/8	4 1/8	3/4 - 2 11/16	3 1/2

Standard Keyseats

Bore Range	Keyseats
1/2"-9/16"	1/8" x 1/16"
5/8-7/8	3/16 x 3/32
1 5/16-1 1/4	1/4 x 1/8
1 5/16-1 3/8	5/16 x 5/32
1 7/16-1 3/4	3/8 x 3/16
1 13/16-2 1/4	1/2 x 1/4
2 5/16-2 11/16	5/8 x 5/16

1 3/8" Bore Bushings also available with 3/8"x3/16" Keyseat.

Taper Bore Poly-V Sheaves STL

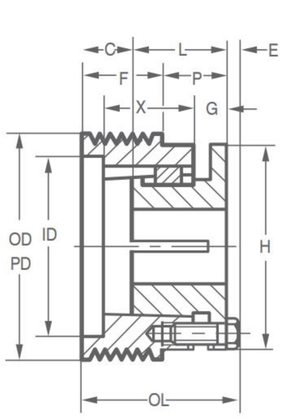

TYPE 3B

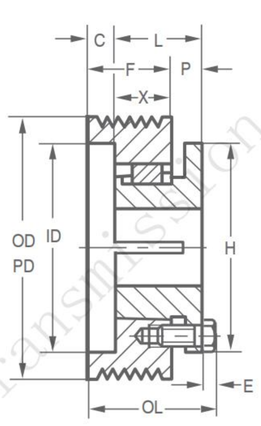

TYPE 5B

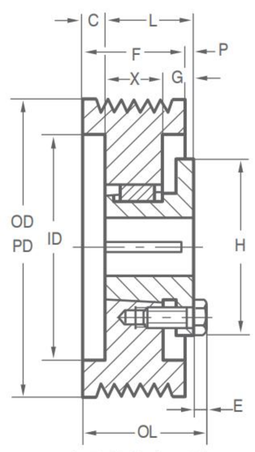

TYPE 4S

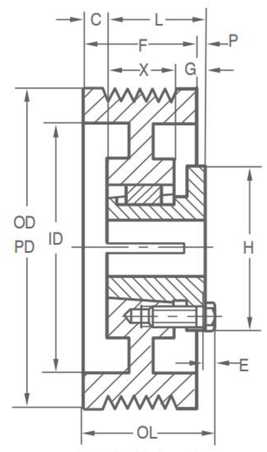

TYPE 4W

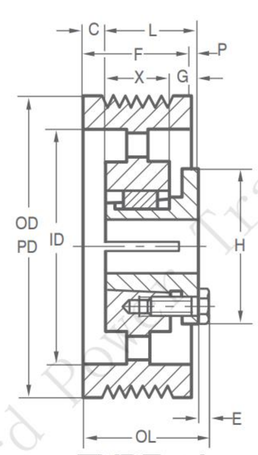

TYPE 4A

L8 Specifications--Stock "L" Sheaves

PART NO.	Diameters		Bush	Type	Dimensions										Wt Less Bush
	OD	PD			ID	OL	F	L	P	C	H	G	X	E	
8L30P	3.00	3.00	P1	3B	2 1/16	3 1/2	2 1/16	1 15/16	1 3/16	1 5/16	3	5/8	2 5/16	1/4	2.5
8L32P	3.20	3.20	P1	3B	2 1/4	3 1/2	2 1/16	1 15/16	1 3/16	1 5/16	3	5/8	2 5/16	1/4	3.1
8L34P	3.40	3.40	P1	5B	2 1/2	2 15/16	2 1/16	1 15/16	5/8	3/4	3	—	1 5/16	1/4	2.5
8L36P	3.60	3.60	P1	5B	2 11/16	2 15/16	2 1/16	1 15/16	5/8	3/4	3	—	1 5/16	1/4	2.8
8L38P	3.80	3.80	P1	5B	2 7/8	2 15/16	2 1/16	1 15/16	5/8	3/4	3	—	1 5/16	1/4	3.4
8L40P	4.00	4.00	P1	5B	3 1/16	2 15/16	2 1/16	1 15/16	5/8	3/4	3	—	1 5/16	1/4	3.7
8L42P	4.20	4.20	P1	4S	3 1/16	2 5/16	2 1/16	1 15/16	—	1/8	3	5/8	1 5/16	1/4	4.3
8L44P	4.40	4.40	P1	4S	3 1/2	2 5/16	2 1/16	1 15/16	—	1/8	3	5/8	1 5/16	1/4	4.6
8L46P	4.60	4.60	P1	4S	3 11/16	2 5/16	2 1/16	1 15/16	—	1/8	3	5/8	1 5/16	1/4	5.1
8L48P	4.80	4.80	P1	4S	3 7/8	2 5/16	2 1/16	1 15/16	—	1/8	3	5/8	1 5/16	1/4	5.8
8L50P	5.00	5.00	P1	4W	4 1/16	2 5/16	2 1/16	1 15/16	—	1/8	3	5/8	1 5/16	1/4	6.5
8L52P	5.20	5.20	P1	4W	4 1/4	2 5/16	2 1/16	1 15/16	—	1/8	3	5/8	1 5/16	1/4	7.1
8L54P	5.40	5.40	P1	4W	3 15/16	2 5/16	2 1/16	1 15/16	—	1/8	3	5/8	1 5/16	1/4	8.0
8L56P	5.60	5.60	P1	4W	4 11/16	2 5/16	2 1/16	1 15/16	—	1/8	3	5/8	1 5/16	1/4	8.3
8L58P	5.80	5.80	P1	4W	4 3/4	2 5/16	2 1/16	1 15/16	—	1/8	3	5/8	1 5/16	1/4	8.7
8L60P	6.00	6.00	P1	4W	5 1/16	2 5/16	2 1/16	1 15/16	—	1/8	3	5/8	1 5/16	1/4	9.0
8L62P	6.20	6.20	P1	4W	4 3/4	2 5/16	2 1/16	1 15/16	—	1/8	3	5/8	1 5/16	1/4	9.5
8L64P	6.40	6.40	P1	4W	4 15/16	2 5/16	2 1/16	1 15/16	—	1/8	3	5/8	1 5/16	1/4	9.8
8L70Q	7.00	7.00	Q1	4A	5 13/16	2 15/16	2 1/16	2 1/2	19/32	5/32	4 1/8	3/4	1 3/4	9/32	10.8
8L74Q	7.40	7.40	Q1	4A	6	2 15/16	2 1/16	2 1/2	19/32	5/32	4 1/8	3/4	1 3/4	9/32	11.5
8L80Q	8.00	8.00	Q1	4A	6 15/16	2 15/16	2 1/16	2 1/2	19/32	5/32	4 1/8	3/4	1 3/4	9/32	13.9
8L90Q	9.00	9.00	Q1	4A	7 7/8	2 15/16	2 1/16	2 1/2	19/32	5/32	4 1/8	3/4	1 3/4	9/32	15.5
8L100Q	10.00	10.00	Q1	4A	7 13/16	2 15/16	2 1/16	2 1/2	19/32	5/32	4 1/8	3/4	1 3/4	9/32	18.0
8L120Q	12.00	12.00	Q1	4A	10 7/8	2 15/16	2 1/16	2 1/2	19/32	5/32	4 1/8	3/4	1 3/4	9/32	23.3
8L140Q	14.00	14.00	Q1	4A	12 1/8	2 15/16	2 1/16	2 1/2	19/32	5/32	4 1/8	3/4	1 3/4	9/32	31.6
8L160Q	16.00	16.00	Q1	4A	14 9/16	2 15/16	2 1/16	2 1/2	19/32	5/32	4 1/8	3/4	1 3/4	9/32	35.5
8L180Q	18.00	18.00	Q1	4A	17	2 15/16	2 1/16	2 1/2	19/32	5/32	4 1/8	3/4	1 3/4	9/32	40.9
8L200Q	20.00	20.00	Q1	4A	18 1/2	2 15/16	2 1/16	2 1/2	19/32	5/32	4 1/8	3/4	1 3/4	9/32	45.9
8L240Q	24.00	24.00	Q1	4A	23	2 15/16	2 1/16	2 1/2	19/32	5/32	4 1/8	3/4	1 3/4	9/32	54.0
8L300Q	30.00	30.00	Q1	4A	28 1/2	2 15/16	2 1/16	2 1/2	19/32	5/32	4 1/8	3/4	1 3/4	9/32	87.0

STL Bushing Dimensions

Part No.	Dimensions									Bore Range	Wt Lbs.
	M	L	G	X	E	T	U	D	H		
P1	2 3/16"	1 5/16"	5/8"	1 5/16"	1/4"	1 17/32"	13/32"	1 15/16"	3"	1/2" - 1 3/4"	1 1/4
P2	3 3/16	2 5/16	5/8	2 5/16	1/4	2 17/32	13/32	1 15/16	3	3/4 - 1 3/4	1 1/2
Q1	3 25/32	2 1/2	3/4	1 3/4	9/32	1 31/32	17/32	2 7/8	4 1/8	3/4 - 2 11/16	3 1/2

Standard Keyseats

Bore Range	Keyseats
1/2"-9/16"	1/8" x 1/16"
5/8-7/8	3/16 x 3/32
15/16-1 1/4	1/4 x 1/8
1 5/16-1 3/8	5/16 x 5/32
1 7/16-1 3/4	3/8 x 3/16
1 13/16-2 1/4	1/2 x 1/4
2 5/16-2 11/16	5/8 x 5/16

1 3/8" Bore Bushings also available with 3/8"x3/16" Keyseat.

Taper Bore Poly-V Sheaves STL

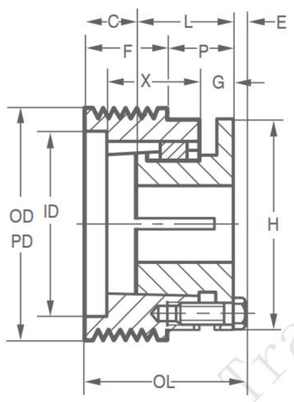

TYPE 3B

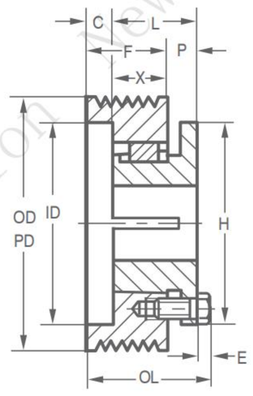

TYPE 5B

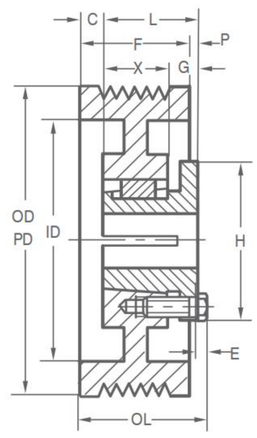

TYPE 4W

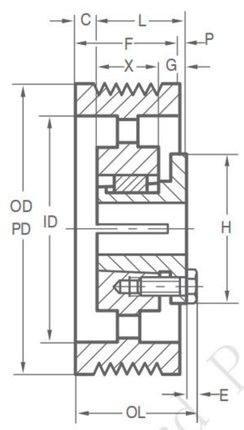

TYPE 4A

L10 Specifications--Stock "L" Sheaves

PART NO.	Diameters		Bush	Type	Dimensions										Wt Less Bush
	OD	PD			ID	OL	F	L	P	C	H	G	X	E	
10L30P	3.00	3.00	P2	3B	2 1/16	3 7/8	2 7/16	2 15/16	1 3/16	11/16	3	5/8	2 5/16	1/4	2.8
10L32P	3.20	3.20	P2	3B	2 1/4	3 7/8	2 7/16	2 15/16	1 3/16	11/16	3	5/8	2 5/16	1/4	3.5
10L34P	3.40	3.40	P1	5B	2 1/2	3 5/16	2 7/16	1 15/16	5/8	1 1/8	3	—	1 5/16	1/4	2.8
10L36P	3.60	3.60	P1	5B	2 11/16	3 5/16	2 7/16	1 15/16	5/8	1 1/8	3	—	1 5/16	1/4	3.3
10L38P	3.80	3.80	P1	5B	2 1/4	3 5/16	2 7/16	1 15/16	5/8	1 1/8	3	—	1 5/16	1/4	3.8
10L40P	4.00	4.00	P1	5B	3 1/16	3 5/16	2 7/16	1 15/16	5/8	1 1/8	3	—	1 5/16	1/4	4.3
10L42P	4.20	4.20	P1	4W	3 1/4	2 11/16	2 7/16	1 15/16	—	1/2	3	5/8	1 5/16	1/4	4.7
10L44P	4.40	4.40	P1	4W	3 1/2	2 11/16	2 7/16	1 15/16	—	1/2	3	5/8	1 5/16	1/4	5.1
10L46P	4.60	4.60	P1	4W	3 11/16	2 11/16	2 7/16	1 15/16	—	1/2	3	5/8	1 5/16	1/4	5.6
10L48P	4.80	4.80	P1	4W	3 7/8	2 11/16	2 7/16	1 15/16	—	1/2	3	5/8	1 5/16	1/4	6.3
10L50P	5.00	5.00	P1	4W	4 1/16	2 11/16	2 7/16	1 15/16	—	1/2	3	5/8	1 5/16	1/4	6.8
10L52P	5.20	5.20	P1	4W	4 1/4	2 11/16	2 7/16	1 15/16	—	1/2	3	5/8	1 5/16	1/4	7.5
10L54Q	5.40	5.40	Q1	4W	4 1/2	2 25/32	2 7/16	2 1/2	1/16	—	4 1/8	3/4	1 3/4	9/32	8.1
10L56Q	5.60	5.60	Q1	4W	4 11/16	2 25/32	2 7/16	2 1/2	1/16	—	4 1/8	3/4	1 3/4	9/32	8.8
10L58Q	5.80	5.80	Q1	4W	4 7/8	2 25/32	2 7/16	2 1/2	1/16	—	4 1/8	3/4	1 3/4	9/32	9.6
10L60Q	6.00	6.00	Q1	4W	5 1/16	2 25/32	2 7/16	2 1/2	1/16	—	4 1/8	3/4	1 3/4	9/32	10.4
10L62Q	6.20	6.20	Q1	4W	5 1/4	2 25/32	2 7/16	2 1/2	1/16	—	4 1/8	3/4	1 3/4	9/32	11.5
10L64Q	6.40	6.40	Q1	4W	5 1/2	2 25/32	2 7/16	2 1/2	1/16	—	4 1/8	3/4	1 3/4	9/32	11.9
10L70Q	7.00	7.00	Q1	4W	5 9/16	3 1/8	2 7/16	2 1/2	13/32	11/32	4 1/8	3/4	1 3/4	9/32	12.6
10L74Q	7.40	7.40	Q1	4A	6	3 1/8	2 7/16	2 1/2	13/32	11/32	4 1/8	3/4	1 3/4	9/32	13.3
10L80Q	8.00	8.00	Q1	4A	6 9/16	3 1/8	2 7/16	2 1/2	13/32	11/32	4 1/8	3/4	1 3/4	9/32	14.5
10L90Q	9.00	9.00	Q1	4A	7 7/8	3 1/8	2 7/16	2 1/2	13/32	11/32	4 1/8	3/4	1 3/4	9/32	16.1
10L100Q	10.00	10.00	Q1	4A	7 13/16	3 1/8	2 7/16	2 1/2	13/32	11/32	4 1/8	3/4	1 3/4	9/32	19.2
10L120Q	12.00	12.00	Q1	4A	10 15/16	3 1/8	2 7/16	2 1/2	13/32	11/32	4 1/8	3/4	1 3/4	9/32	24.3
10L140Q	14.00	14.00	Q1	4A	12 1/8	3 1/8	2 7/16	2 1/2	13/32	11/32	4 1/8	3/4	1 3/4	9/32	31.0
10L160Q	16.00	16.00	Q1	4A	14 9/16	3 1/8	2 7/16	2 1/2	13/32	11/32	4 1/8	3/4	1 3/4	9/32	34.6
10L180Q	18.00	18.00	Q1	4A	17	3 1/8	2 7/16	2 1/2	13/32	11/32	4 1/8	3/4	1 3/4	9/32	41.1
10L200Q	20.00	20.00	Q1	4A	18 1/2	3 1/8	2 7/16	2 1/2	13/32	11/32	4 1/8	3/4	1 3/4	9/32	45.3
10L240Q	24.00	24.00	Q1	4A	22 3/16	3 1/8	2 7/16	2 1/2	13/32	11/32	4 1/8	3/4	1 3/4	9/32	61.5
10L300Q	30.00	30.00	Q1	4A	28 1/2	3 1/8	2 7/16	2 1/2	13/32	11/32	4 1/8	3/4	1 3/4	9/32	94.0

STL Bushing Dimensions

Part No.	Dimensions									Bore Range	Wt Lbs.
	M	L	G	X	E	T	U	D	H		
P1	2 3/16"	1 5/16"	5/8"	1 5/16"	1/4"	1 17/32"	13/32"	1 15/16"	3"	1/2" - 1 3/4"	1 1/4
P2	3 3/16	2 5/16	5/8	2 5/16	1/4	2 17/32	13/32	1 15/16	3	3/4 - 1 3/4	1 1/2
Q1	3 25/32	2 1/2	3/4	1 3/4	9/32	1 31/32	17/32	2 7/8	4 1/8	3/4 - 2 11/16	3 1/2

Standard Keyseats

Bore Range	Keyseats
1/2"-9/16"	1/8" x 1/16"
5/8-7/8	3/16 x 3/32
1 5/16-1 1/4	1/4 x 1/8
1 5/16-1 3/8	5/16 x 5/32
1 7/16- 1 3/4	3/8 x 3/16
1 13/16-2 1/4	1/2 x 1/4
2 5/16-2 11/16	5/8 x 5/16

1 3/8" Bore Bushings also available with 3/8"x3/16" Keyseat.

Taper Bore Poly-V Sheaves STL

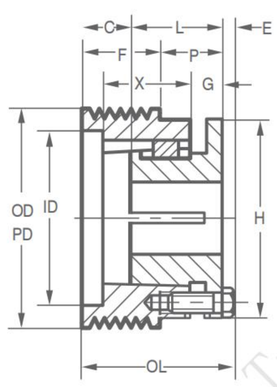

TYPE 3B

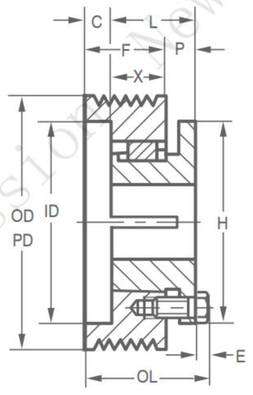

TYPE 5B

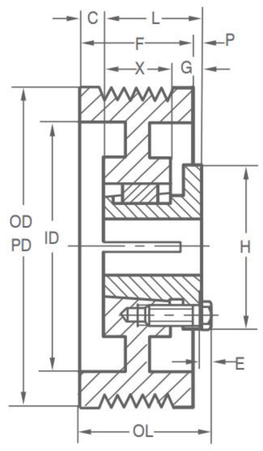

TYPE 4W

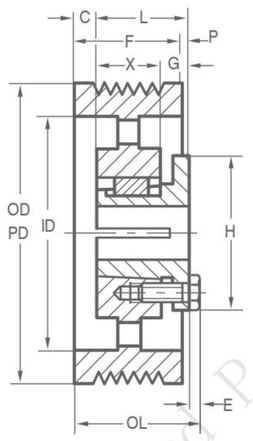

TYPE 4A

L12 Specifications--Stock "L" Sheaves

PART NO.	Diameters		Bush	Type	Dimensions										Wt Less Bush
	OD	PD			ID	OL	F	L	P	C	H	G	X	E	
12L30P	3.00	3.00	P2	3B	2 1/16	4 1/4	2 13/16	2 15/16	1 3/16	1 1/16	3	5/8	2 5/16	1/4	3.1
12L32P	3.20	3.20	P2	3B	2 1/4	4 1/4	2 13/16	2 15/16	1 3/16	1 1/16	3	5/8	2 5/16	1/4	3.6
12L34P	3.40	3.40	P1	5B	2 1/2	3 11/16	2 13/16	1 15/16	5/8	1 1/2	3	—	1 5/16	1/4	3.0
12L36P	3.60	3.60	P1	5B	2 11/16	3 11/16	2 13/16	1 15/16	5/8	1 1/2	3	—	1 5/16	1/4	3.6
12L38P	3.80	3.80	P1	5B	2 7/8	3 11/16	2 13/16	1 15/16	5/8	1 1/2	3	—	1 5/16	1/4	4.0
12L40P	4.00	4.00	P1	5B	3 1/16	3 11/16	2 13/16	1 15/16	5/8	1 1/2	3	—	1 5/16	1/4	4.7
12L42P	4.20	4.20	P1	4W	3 1/4	3 1/16	2 13/16	1 15/16	—	7/8	3	5/8	1 5/16	1/4	5.0
12L44P	4.40	4.40	P1	4W	3 1/2	3 1/16	2 13/16	1 15/16	—	7/8	3	5/8	1 5/16	1/4	5.5
12L46P	4.60	4.60	P1	4W	3 11/16	3 1/16	2 13/16	1 15/16	—	7/8	3	5/8	1 5/16	1/4	6.0
12L48P	4.80	4.80	P1	4W	3 7/8	3 1/16	2 13/16	1 15/16	—	7/8	3	5/8	1 5/16	1/4	6.9
12L50P	5.00	5.00	P1	4W	4 1/16	3 1/16	2 13/16	1 15/16	—	7/8	3	5/8	1 5/16	1/4	7.5
12L52P	5.20	5.20	P1	4W	4 1/4	3 1/16	2 13/16	1 15/16	—	7/8	3	5/8	1 5/16	1/4	7.7
12L54Q	5.40	5.40	Q1	4W	4 1/2	3 3/32	2 13/16	2 1/2	—	5/16	4 1/8	3/4	1 3/4	9/32	8.6
12L56Q	5.60	5.60	Q1	4W	4 11/16	3 3/32	2 13/16	2 1/2	—	5/16	4 1/8	3/4	1 3/4	9/32	9.3
12L58Q	5.80	5.80	Q1	4W	4 7/8	3 3/32	2 13/16	2 1/2	—	5/16	4 1/8	3/4	1 3/4	9/32	10.3
12L60Q	6.00	6.00	Q1	4W	5 1/16	3 3/32	2 13/16	2 1/2	—	5/16	4 1/8	3/4	1 3/4	9/32	11.1
12L62Q	6.20	6.20	Q1	4W	5 1/4	3 3/32	2 13/16	2 1/2	—	5/16	4 1/8	3/4	1 3/4	9/32	11.9
12L64Q	6.40	6.40	Q1	4W	5 1/2	3 3/32	2 13/16	2 1/2	—	5/16	4 1/8	3/4	1 3/4	9/32	12.9
12L70Q	7.00	7.00	Q1	4W	5 9/16	3 5/16	2 13/16	2 1/2	7/32	17/32	4 1/8	3/4	1 3/4	9/32	13.6
12L74Q	7.40	7.40	Q1	4W	6	3 5/16	2 13/16	2 1/2	7/32	17/32	4 1/8	3/4	1 3/4	9/32	14.0
12L80Q	8.00	8.00	Q1	4A	6 9/16	3 5/16	2 13/16	2 1/2	7/32	17/32	4 1/8	3/4	1 3/4	9/32	15.0
12L90Q	9.00	9.00	Q1	4A	7 7/8	3 5/16	2 13/16	2 1/2	7/32	17/32	4 1/8	3/4	1 3/4	9/32	17.0
12L100Q	10.00	10.00	Q1	4A	7 13/16	3 5/16	2 13/16	2 1/2	7/32	17/32	4 1/8	3/4	1 3/4	9/32	20.2
12L120Q	12.00	12.00	Q1	4A	10 15/16	3 5/16	2 13/16	2 1/2	7/32	17/32	4 1/8	3/4	1 3/4	9/32	27.4
12L140Q	14.00	14.00	Q1	4A	12 1/8	3 5/16	2 13/16	2 1/2	7/32	17/32	4 1/8	3/4	1 3/4	9/32	32.9
12L160Q	16.00	16.00	Q1	4A	14 9/16	3 5/16	2 13/16	2 1/2	7/32	17/32	4 1/8	3/4	1 3/4	9/32	35.5
12L180Q	18.00	18.00	Q1	4A	17	3 5/16	2 13/16	2 1/2	7/32	17/32	4 1/8	3/4	1 3/4	9/32	42.9
12L200Q	20.00	20.00	Q1	4A	18 1/2	3 5/16	2 13/16	2 1/2	7/32	17/32	4 1/8	3/4	1 3/4	9/32	46.5
12L240Q	24.00	24.00	Q1	4A	22 3/16	3 5/16	2 13/16	2 1/2	7/32	17/32	4 1/8	3/4	1 3/4	9/32	60.0
12L300Q	30.00	30.00	Q1	4A	28 1/2	3 5/16	2 13/16	2 1/2	7/32	17/32	4 1/8	3/4	1 3/4	9/32	93.0

Bushing Dimensions

Part No.	Dimensions									Bore Range	Wt Lbs.
	M	L	G	X	E	T	U	D	H		
P1	2 3/16"	1 5/16"	5/8"	1 5/16"	1/4"	1 17/32"	13/32"	1 15/16"	3"	1/2" - 1 3/4"	1 1/4
P2	3 3/16	2 5/16	5/8	2 5/16	1/4	2 17/32	13/32	1 15/16	3	3/4 - 1 3/4	1 1/2
Q1	3 25/32	2 1/2	3/4	1 3/4	9/32	1 31/32	17/32	2 7/8	4 1/8	3/4 - 2 11/16	3 1/2

Standard Keyseats

Bore Range	Keyseats
1/2"-9/16"	1/8" x 1/16"
5/8-7/8	3/16 x 3/32
1 5/16-1 1/4	1/4 x 1/8
1 5/16-1 3/8	5/16 x 5/32
1 7/16-1 3/4	3/8 x 3/16
1 13/16-2 1/4	1/2 x 1/4
2 5/16-2 11/16	5/8 x 5/16

1 3/8" Bore Bushings also available with 3/8"x3/16" Keyseat.

Taper Bore Poly-V Sheaves STL

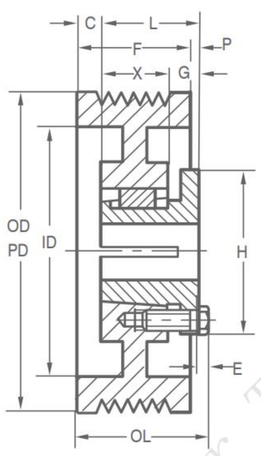

TYPE 4W

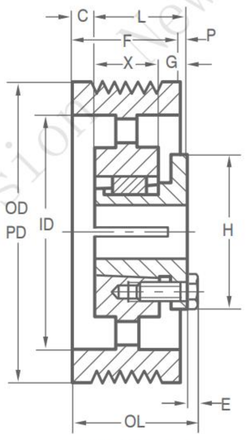

TYPE 4A

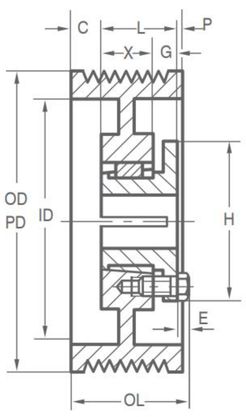

TYPE 6W

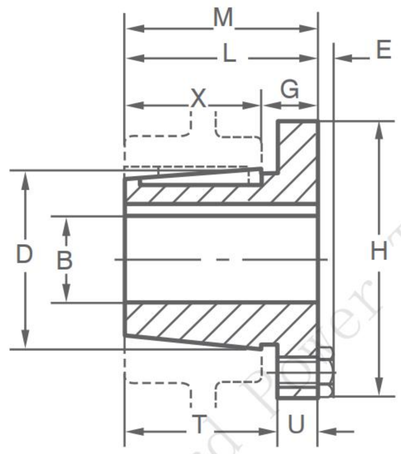

L14 Specifications--Stock "L" Sheaves

PART NO.	Diameters		Bush	Type	Dimensions										Wt Less Bush
	OD	PD			ID	OL	F	L	P	C	H	G	X	E	
14L54Q	5.40	5.40	Q1	4W	4 1/2	3 21/32	3 3/16	2 1/2	—	11/16	4 1/8	3/4	1 3/4	9/32	8.9
14L56Q	5.60	5.60	Q1	4W	4 11/16	3 21/32	3 3/16	2 1/2	—	11/16	4 1/8	3/4	1 3/4	9/32	10.0
14L58Q	5.80	5.80	Q1	4W	4 1/8	3 21/32	3 3/16	2 1/2	—	11/16	4 1/8	3/4	1 3/4	9/32	10.7
14L60Q	6.00	6.00	Q1	4W	5 1/16	3 21/32	3 3/16	2 1/2	—	11/16	4 1/8	3/4	1 3/4	9/32	12.1
14L62Q	6.20	6.20	Q1	4W	5 1/4	3 21/32	3 3/16	2 1/2	—	11/16	4 1/8	3/4	1 3/4	9/32	12.6
14L64Q	6.40	6.40	Q1	4W	5 1/2	3 21/32	3 3/16	2 1/2	—	11/16	4 1/8	3/4	1 3/4	9/32	13.5
14L70Q	7.00	7.00	Q1	4W	5 9/16	3 1/2	3 3/16	2 1/2	1/32	23/32	4 1/8	3/4	1 3/4	9/32	13.7
14L74Q	7.40	7.40	Q1	4W	6	3 1/2	3 3/16	2 1/2	1/32	23/32	4 1/8	3/4	1 3/4	9/32	14.8
14L80Q	8.00	8.00	Q1	4A	6 9/16	3 1/2	3 3/16	2 1/2	1/32	23/32	4 1/8	3/4	1 3/4	9/32	16.0
14L90R	9.00	9.00	R1	4A	7 1/4	3 3/4	3 3/16	2 7/8	9/32	19/32	5 3/8	7/8	2	9/32	23.5
14L100R	10.00	10.00	R1	4A	7 15/16	3 3/4	3 3/16	2 7/8	9/32	19/32	5 3/8	7/8	2	9/32	25.5
14L120R	12.00	12.00	R1	4A	10 5/16	3 3/4	3 3/16	2 7/8	9/32	19/32	5 3/8	7/8	2	9/32	30.1
14L140R	14.00	14.00	R1	4A	12 1/8	3 3/4	3 3/16	2 7/8	9/32	19/32	5 3/8	7/8	2	9/32	34.5
14L160R	16.00	16.00	R1	4A	14 9/16	3 3/4	3 3/16	2 7/8	9/32	19/32	5 3/8	7/8	2	9/32	40.0
14L180R	18.00	18.00	R1	4A	16 15/16	3 3/4	3 3/16	2 7/8	9/32	19/32	5 3/8	7/8	2	9/32	43.5
14L200R	20.00	20.00	R1	4A	18 7/16	3 3/4	3 3/16	2 7/8	9/32	19/32	5 3/8	7/8	2	9/32	50.5
14L240R	24.00	24.00	R1	4A	22 3/16	3 3/4	3 3/16	2 7/8	9/32	19/32	5 3/8	7/8	2	9/32	61.5
14L300R	30.00	30.00	R1	4A	28 1/2	3 3/4	3 3/16	2 7/8	9/32	19/32	5 3/8	7/8	2	9/32	98.2

L16 Specifications--Stock "L" Sheaves

PART NO.	Diameters		Bush	Type	Dimensions										Wt Less Bush
	OD	PD			ID	OL	F	L	P	C	H	G	X	E	
16L54Q	5.40	5.40	Q1	4W	4 1/2	3 27/32	3 9/16	2 1/2	—	1 1/16	4 1/8	3/4	1 3/4	9/32	9.5
16L56Q	5.60	5.60	Q1	4W	4 11/16	3 27/32	3 9/16	2 1/2	—	1 1/16	4 1/8	3/4	1 3/4	9/32	10.5
16L58Q	5.80	5.80	Q1	4W	4 7/8	3 27/32	3 9/16	2 1/2	—	1 1/16	4 1/8	3/4	1 3/4	9/32	11.4
16L60Q	6.00	6.00	Q1	4W	5 1/16	3 27/32	3 9/16	2 1/2	—	1 1/16	4 1/8	3/4	1 3/4	9/32	12.4
16L62Q	6.20	6.20	Q1	4W	4 5/16	3 27/32	3 9/16	2 1/2	—	1 1/16	4 1/8	3/4	1 3/4	9/32	13.6
16L64Q	6.40	6.40	Q1	4W	5 1/2	3 27/32	3 9/16	2 1/2	—	1 1/16	4 1/8	3/4	1 3/4	9/32	14.3
16L70Q	7.00	7.00	Q1	6W	5 9/16	3 11/16	3 9/16	2 1/2	5/32	29/32	4 1/8	3/4	1 3/4	9/32	14.8
16L74Q	7.40	7.40	Q1	6W	6 7/16	3 11/16	3 9/16	2 1/2	5/32	29/32	4 1/8	3/4	1 3/4	9/32	15.3
16L80Q	8.00	8.00	Q1	4A	6 9/16	3 11/16	3 9/16	2 1/2	5/32	29/32	4 1/8	3/4	1 3/4	9/32	17.1
16L90R	9.00	9.00	R1	4A	7 15/16	3 15/16	3 9/16	2 7/8	3/32	25/32	5 3/8	7/8	2	9/32	24.1
16L100R	10.00	10.00	R1	4A	7 15/16	3 15/16	3 9/16	2 7/8	3/32	25/32	5 3/8	7/8	2	9/32	26.9
16L120R	12.00	12.00	R1	4A	10 5/16	3 15/16	3 9/16	2 7/8	3/32	25/32	5 3/8	7/8	2	9/32	30.9
16L140R	14.00	14.00	R1	4A	12 1/8	3 15/16	3 9/16	2 7/8	3/32	25/32	5 3/8	7/8	2	9/32	38.5
16L160R	16.00	16.00	R1	4A	14 9/16	3 15/16	3 9/16	2 7/8	3/32	25/32	5 3/8	7/8	2	9/32	43.8
16L180R	18.00	18.00	R1	4A	16 5/16	3 15/16	3 9/16	2 7/8	3/32	25/32	5 3/8	7/8	2	9/32	49.3
16L200R	20.00	20.00	R1	4A	18 7/16	3 15/16	3 9/16	2 7/8	3/32	25/32	5 3/8	7/8	2	9/32	53.0
16L240R	24.00	24.00	R1	4A	22 3/16	3 15/16	3 9/16	2 7/8	3/32	25/32	5 3/8	7/8	2	9/32	64.5
16L300R	30.00	30.00	R1	4A	28 1/2	3 15/16	3 9/16	2 7/8	3/32	25/32	5 3/8	7/8	2	9/32	103.5

Taper Bore Poly-V Sheaves STL

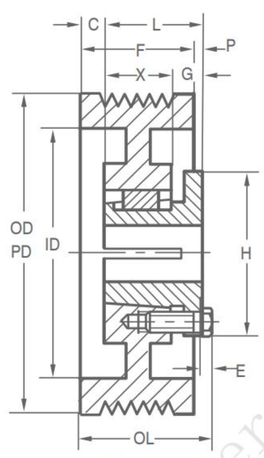

TYPE 4W

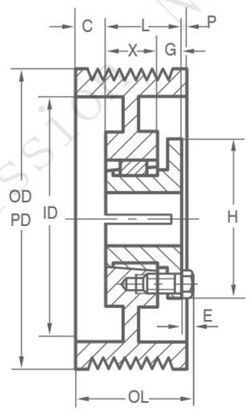

TYPE 6W

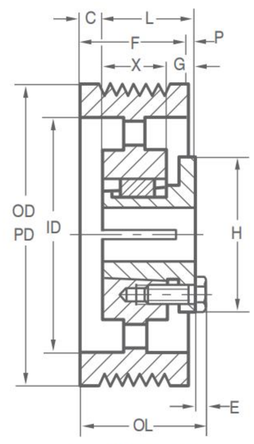

TYPE 4A

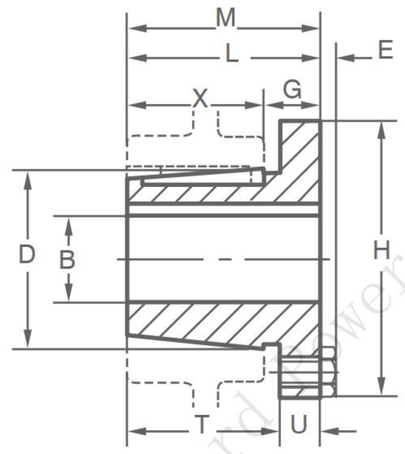

L20 Specifications--Stock "L" Sheaves

PART NO.	Diameters		Bush	Type	Dimensions										Wt Less Bush
	OD	PD			ID	OL	F	L	P	C	H	G	X	E	
20L54Q	5.40	5.40	Q1	4W	4 1/2	4 17/32	4 1/4	2 1/2	—	1 3/4	4 1/8	3/4	1 3/4	9/32	10.4
20L56Q	5.60	5.60	Q1	4W	4 11/16	4 17/32	4 1/4	2 1/2	—	1 3/4	4 1/8	3/4	1 3/4	9/32	11.3
20L58Q	5.80	5.80	Q1	4W	4 7/8	4 17/32	4 1/4	2 1/2	—	1 3/4	4 1/8	3/4	1 3/4	9/32	12.4
20L60Q	6.00	6.00	Q1	4W	5 1/16	4 17/32	4 1/4	2 1/2	—	1 3/4	4 1/8	3/4	1 3/4	9/32	13.5
20L62Q	6.20	6.20	Q1	4W	5 1/4	4 17/32	4 1/4	2 1/2	—	1 3/4	4 1/8	3/4	1 3/4	9/32	15.0
20L64Q	6.40	6.40	Q1	4W	5 1/2	4 17/32	4 1/4	2 1/2	—	1 3/4	4 1/8	3/4	1 3/4	9/32	15.6
20L70Q	7.00	7.00	Q1	6W	5 9/16	4 1/4	4 1/4	2 1/2	1/2	1 1/4	4 1/8	3/4	1 3/4	9/32	18.8
20L74Q	7.40	7.40	Q1	6W	6	4 1/4	4 1/4	2 1/2	1/2	1 1/4	4 1/8	3/4	1 3/4	9/32	21.7
20L80Q	8.00	8.00	Q1	4A	6 9/16	4 1/4	4 1/4	2 1/2	1/2	1 1/4	4 1/8	3/4	1 3/4	9/32	23.2
20L90R	9.00	9.00	R1	4A	7 1/4	4 9/32	4 1/4	2 7/8	1/4	1 1/8	5 3/8	7/8	2	9/32	26.4
20L100R	10.00	10.00	R1	4A	7 15/16	4 9/32	4 1/4	2 7/8	1/4	1 1/8	5 3/8	7/8	2	9/32	29.9
20L120R	12.00	12.00	R1	4A	10 5/16	4 9/32	4 1/4	2 7/8	1/4	1 1/8	5 3/8	7/8	2	9/32	34.0
20L140R	14.00	14.00	R1	4A	12 1/8	4 9/32	4 1/4	2 7/8	1/4	1 1/8	5 3/8	7/8	2	9/32	41.6
20L160R	16.00	16.00	R1	4A	14 9/16	4 9/32	4 1/4	2 7/8	1/4	1 1/8	5 3/8	7/8	2	9/32	46.9
20L180R	18.00	18.00	R1	4A	16 15/16	4 9/32	4 1/4	2 7/8	1/4	1 1/8	5 3/8	7/8	2	9/32	54.0
20L200R	20.00	20.00	R1	4A	18 7/16	4 9/32	4 1/4	2 7/8	1/4	1 1/8	5 3/8	7/8	2	9/32	56.5
20L240R	24.00	24.00	R1	4A	22 3/16	4 9/32	4 1/4	2 7/8	1/4	1 1/8	5 3/8	7/8	2	9/32	72.5
20L300R	30.00	30.00	R1	4A	28 1/2	4 9/32	4 1/4	2 7/8	1/4	1 1/8	5 3/8	7/8	2	9/32	112.0

STL Bushing Dimensions

Part No.	Dimensions									Bore Range	Wt Lbs.
	M	L	G	X	E	T	U	D	H		
Q1	3 25/32	2 1/2	3/4	1 3/4	9/32	1 31/32	17/32	2 7/8	4 1/8	3/4 - 2 11/16	3 1/2
R1	3 5/32	2 7/8	7/8	2	9/32	2 1/4	5/8	4	5 3/8	1 1/8 - 3 3/4	7 1/2



Standard Keyseats

Bore Range	Keyseats
5/8-7/8	3/16 x 3/32
1 5/16-1 1/4	1/4 x 1/8
1 5/16-1 3/8	5/16 x 5/32
1 7/16- 1 3/4	3/8 x 3/16
1 13/16-2 1/4	1/2 x 1/4
2 5/16-2 11/16	5/8 x 5/16
3 3/8-3 3/4	7/8 x 7/16

1 3/8" Bore Bushings also available with 3/8"x3/16" Keyseat.

Taper Bore Poly-V Sheaves STL

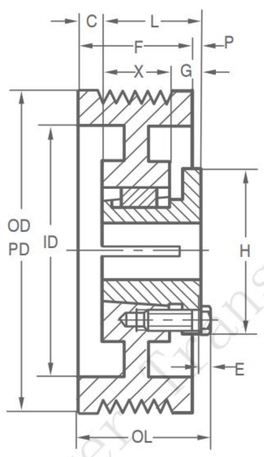

TYPE 4W

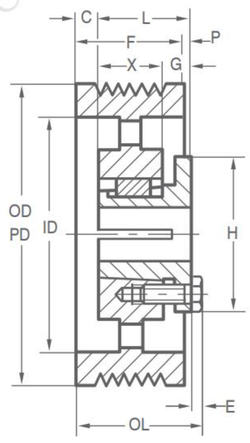

TYPE 4A

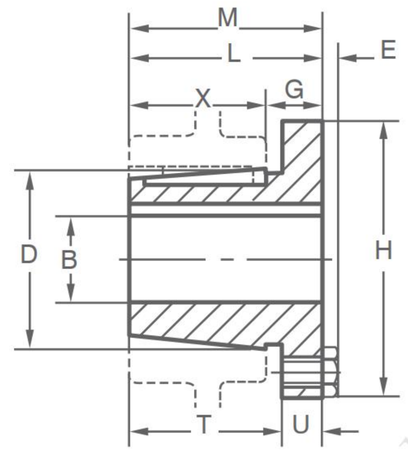

Standard Keyseats

Bore	Keyseat	Bore	Keyseat
3/4" - 7/8"	3/16" x 3/32"	2 5/16" - 2 3/4"	5/8" x 5/16"
15/16 - 1 1/4	1/4" x 1/8"	2 13/16 - 3 1/4	3/4 x 3/8
1 5/16 - 1 3/8	5/16 x 5/32	3 3/8 - 3 3/4	7/8 x 7/16
1 7/16 - 1 3/4	3/8 x 3/16	3 7/8 - 4 1/4	1 x 1/2
1 13/16 - 2 1/4	1/2 x 1/4		

1 3/8" Bore Bushings(except R2) also available with 3/8"x3/16" Keyseat.

STL Taper Bushings



STL Bushing Dimensions

Part No.	Dimensions									Bore Range	Wt Lbs.
	M	L	G	X	E	T	U	D	H		
Q1	2 25/32	2 1/2	3/4	1 3/4	9/32	1 31/32	17/32	2 7/8	4 1/8	3/4 - 2 11/16	3 1/2
R1	3 5/32	2 7/8	7/8	2	9/32	2 1/4	5/8	4	5 3/8	1 1/8 - 3 3/4	7 1/2

M6 Specifications--Stock "M" Sheaves

PART NO.	Diameters		Bush	Type	Dimensions										Wt Less Bush
	OD	PD			ID	OL	F	L	P	C	H	G	X	E	
6M70Q	7.00	7.00	Q1	4W	5 5/8	3 11/32	2 7/8	2 1/2	3/16	9/16	4 1/8	3/4	1 3/4	9/32	14.2
6M74Q	7.40	7.40	Q1	4W	5 9/16	3 11/32	2 7/8	2 1/2	3/16	9/16	4 1/8	3/4	1 3/4	9/32	14.5
6M76Q	7.60	7.60	Q1	4W	6	3 11/32	2 7/8	2 1/2	3/16	9/16	4 1/8	3/4	1 3/4	9/32	15.4
6M80Q	8.00	8.00	Q1	4W	6 9/16	3 11/32	2 7/8	2 1/2	3/16	9/16	4 1/8	3/4	1 3/4	9/32	16.4
6M84Q	8.40	8.40	Q1	4W	6 9/16	3 11/32	2 7/8	2 1/2	3/16	9/16	4 1/8	3/4	1 3/4	9/32	17.8
6M86Q	8.60	8.60	Q1	4A	7 1/8	3 11/32	2 7/8	2 1/2	3/16	9/16	4 1/8	3/4	1 3/4	9/32	19.7
6M90Q	9.00	9.00	Q1	4A	7 1/8	3 11/32	2 7/8	2 1/2	3/16	9/16	4 1/8	3/4	1 3/4	9/32	21.3
6M92Q	9.20	9.20	Q1	4A	7 9/16	3 11/32	2 7/8	2 1/2	3/16	9/16	4 1/8	3/4	1 3/4	9/32	21.7
6M96Q	9.60	9.60	Q1	4A	7 13/16	3 11/32	2 7/8	2 1/2	3/16	9/16	4 1/8	3/4	1 3/4	9/32	22.0
6M100Q	10.00	10.00	Q1	4A	7 13/16	3 11/32	2 7/8	2 1/2	3/16	9/16	4 1/8	3/4	1 3/4	9/32	22.3
6M106Q	10.60	10.60	Q1	4A	8 3/8	3 11/32	2 7/8	2 1/2	3/16	9/16	4 1/8	3/4	1 3/4	9/32	24.5
6M110Q	11.00	11.00	Q1	4A	9 1/2	3 11/32	2 7/8	2 1/2	3/16	9/16	4 1/8	3/4	1 3/4	9/32	25.6
6M120R	12.00	12.00	R1	4A	10 5/16	3 19/32	2 7/8	2 7/8	7/16	7/16	5 3/8	7/8	2	9/32	30.3
6M130R	13.00	13.00	R1	4A	11 1/4	3 19/32	2 7/8	2 7/8	7/16	7/16	5 3/8	7/8	2	9/32	33.0
6M140Q	14.00	14.00	R1	4A	12 1/4	3 19/32	2 7/8	2 7/8	7/16	7/16	5 3/8	7/8	2	9/32	36.0
6M150R	15.00	15.00	R1	4A	13 1/2	3 19/32	2 7/8	2 7/8	7/16	7/16	5 3/8	7/8	2	9/32	38.9
6M160R	16.00	16.00	R1	4A	14 1/4	3 19/32	2 7/8	2 7/8	7/16	7/16	5 3/8	7/8	2	9/32	42.0
6M180R	18.00	18.00	R1	4A	16 1/4	3 19/32	2 7/8	2 7/8	7/16	7/16	5 3/8	7/8	2	9/32	48.0
6M200R	20.00	20.00	R1	4A	18 1/4	3 19/32	2 7/8	2 7/8	7/16	7/16	5 3/8	7/8	2	9/32	54.5
6M240R	24.00	24.00	R1	4A	22	3 19/32	2 7/8	2 7/8	7/16	7/16	5 3/8	7/8	2	9/32	65.5
6M300R	30.00	30.00	R1	4A	28 1/2	3 19/32	2 7/8	2 7/8	7/16	7/16	5 3/8	7/8	2	9/32	99.0
6M360R	36.00	36.00	R1	4A	34 3/16	3 19/32	2 7/8	2 7/8	7/16	7/16	5 3/8	7/8	2	9/32	122.0
6M440R	44.00	44.00	R1	4A	42 1/16	3 19/32	2 7/8	2 7/8	7/16	7/16	5 3/8	7/8	2	9/32	167.0

Taper Bore Poly-V Sheaves STL

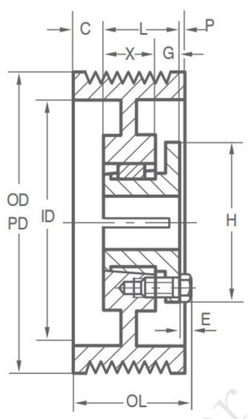

TYPE 6W

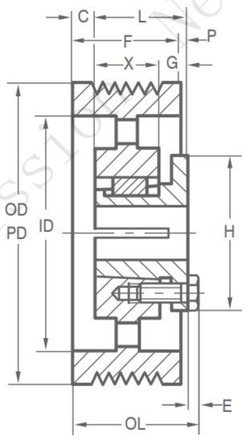

TYPE 4A

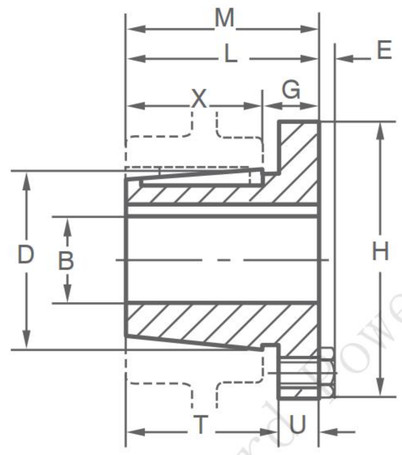

STL Taper Bushings



Standard Keyseats

Bore	Keyseat	Bore	Keyseat
3/4" - 7/8"	3/16" x 3/32"	2 5/16" - 2 3/4"	5/8" x 5/16"
15/16 - 1 1/4	1/4" x 1/8"	2 13/16 - 3 1/4	3/4 x 3/8
1 5/16 - 1 3/8	5/16 x 5/32	3 3/8 - 3 3/4	7/8 x 7/16
1 7/16 - 1 3/4	3/8 x 3/16	3 7/8 - 4 1/4	1 x 1/2
1 13/16 - 2 1/4	1/2 x 1/4		

1 3/8" Bore Bushings(except R2) also available with 3/8"x3/16" Keyseat.

STL Bushing Dimensions

Part No.	Dimensions									Bore Range	Wt Lbs.
	M	L	G	X	E	T	U	D	H		
Q1	2 25/31	2 1/2	3/4	1 3/4	9/32	1 31/32	17/32	2 7/8	4 1/8	3/4 - 2 11/16	3 1/2
R1	3 5/32	2 7/8	7/8	2	9/32	2 1/4	5/8	4	5 3/8	1 1/8 - 3 3/4	7 1/2

M8 Specifications--Stock "M" Sheaves

PART NO.	Diameters		Bush	Type	Dimensions										Wt Less Bush
	OD	PD			ID	OL	F	L	P	C	H	G	X	E	
8M70Q	7.00	7.00	Q1	6W	5 5/8	3 11/16	3 9/16	2 1/2	5/32	29/32	4 1/8	3/4	1 3/4	9/32	17.6
8M74Q	7.40	7.40	Q1	6W	6	3 11/16	3 9/16	2 1/2	5/32	29/32	4 1/8	3/4	1 3/4	9/32	18.1
8M76Q	7.60	7.60	Q1	6W	6	3 11/16	3 9/16	2 1/2	5/32	29/32	4 1/8	3/4	1 3/4	9/32	18.7
8M80Q	8.00	8.00	Q1	6W	6 9/16	3 11/16	3 9/16	2 1/2	5/32	29/32	4 1/8	3/4	1 3/4	9/32	19.1
8M84Q	8.40	8.40	Q1	6W	6 9/16	3 11/16	3 9/16	2 1/2	5/32	29/32	4 1/8	3/4	1 3/4	9/32	20.3
8M86Q	8.60	8.60	Q1	6W	7 1/8	3 11/16	3 9/16	2 1/2	5/32	29/32	4 1/8	3/4	1 3/4	9/32	25.3
8M90R	9.00	9.00	R1	6W	7 1/2	3 15/16	3 9/16	2 7/8	3/32	25/32	5 3/8	7/8	2	9/32	26.0
8M92R	9.20	9.20	R1	6W	7 9/16	3 15/16	3 9/16	2 7/8	3/32	25/32	5 3/8	7/8	2	9/32	27.3
8M96R	9.60	9.60	R1	6W	7 15/16	3 15/16	3 9/16	2 7/8	3/32	25/32	5 3/8	7/8	2	9/32	28.1
8M100R	10.00	10.00	R1	6W	7 15/16	3 15/16	3 9/16	2 7/8	3/32	25/32	5 3/8	7/8	2	9/32	29.0
8M106R	10.60	10.60	R1	6W	8 1/2	3 15/16	3 9/16	2 7/8	3/32	25/32	5 3/8	7/8	2	9/32	32.1
8M110R	11.00	11.00	R1	4A	8 13/16	3 15/16	3 9/16	2 7/8	3/32	25/32	5 3/8	7/8	2	9/32	33.8
8M120R	12.00	12.00	R1	4A	10 5/16	3 15/16	3 9/16	2 7/8	3/32	25/32	5 3/8	7/8	2	9/32	34.6
8M130R	13.00	13.00	R1	4A	11 1/4	3 15/16	3 9/16	2 7/8	3/32	25/32	5 3/8	7/8	2	9/32	37.3
8M140R	14.00	14.00	R1	4A	12 1/4	3 15/16	3 9/16	2 7/8	3/32	25/32	5 3/8	7/8	2	9/32	41.4
8M150R	15.00	15.00	R1	4A	13 1/4	3 15/16	3 9/16	2 7/8	3/32	25/32	5 3/8	7/8	2	9/32	42.6
8M160R	16.00	16.00	R1	4A	14 9/16	3 15/16	3 9/16	2 7/8	3/32	25/32	5 3/8	7/8	2	9/32	47.3
8M180R	18.00	18.00	R1	4A	16 1/4	3 15/16	3 9/16	2 7/8	3/32	25/32	5 3/8	7/8	2	9/32	51.3
8M200R	20.00	20.00	R1	4A	18 1/16	3 15/16	3 9/16	2 7/8	3/32	25/32	5 3/8	7/8	2	9/32	60.0
8M240R	24.00	24.00	R1	4A	22 3/16	3 15/16	3 9/16	2 7/8	3/32	25/32	5 3/8	7/8	2	9/32	74.0
8M300R	30.00	30.00	R1	4A	28 1/2	3 15/16	3 9/16	2 7/8	3/32	25/32	5 3/8	7/8	2	9/32	112.0
8M360R	36.00	36.00	R1	4A	34 3/16	3 15/16	3 9/16	2 7/8	3/32	25/32	5 3/8	7/8	2	9/32	139.0
8M440R	44.00	44.00	R1	4A	42 1/16	3 15/16	3 9/16	2 7/8	3/32	25/32	5 3/8	7/8	2	9/32	200.0

Taper Bore Poly-V Sheaves STL

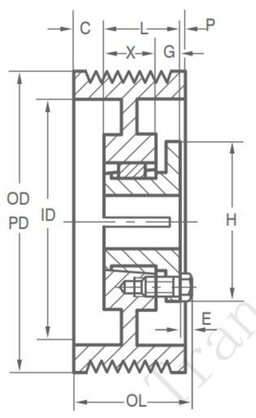

TYPE 6W

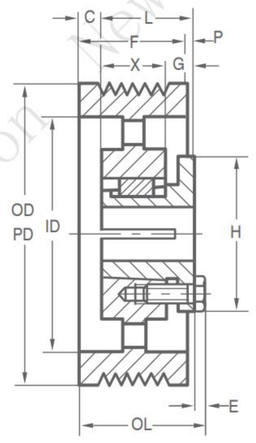

TYPE 4A

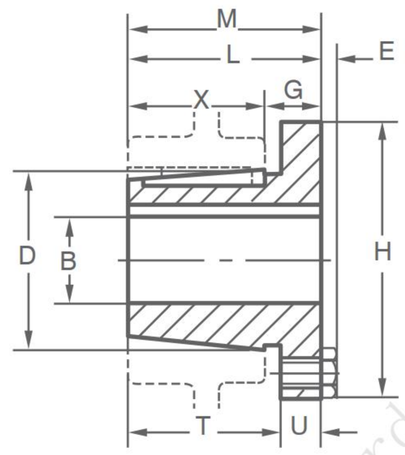

Standard Keyseats

Bore	Keyseat	Bore	Keyseat
3/4" - 7/8"	3/16" x 3/32"	2 5/16" - 2 3/4"	5/8" x 5/16"
15/16 - 1 1/4	1/4" x 1/8"	2 13/16 - 3 1/4	3/4 x 3/8
1 5/16 - 1 3/8	5/16 x 5/32	3 3/8 - 3 3/4	7/8 x 7/16
1 7/16 - 1 3/4	3/8 x 3/16	3 7/8 - 4 1/4	1 x 1/2
1 13/16 - 2 1/4	1/2 x 1/4		

1 3/8" Bore Bushings(except R_2) also available with 3/8"x3/16" Keyseat.

STL Taper Bushings



STL Bushing Dimensions

Part No.	Dimensions									Bore Range	Wt Lbs.
	M	L	G	X	E	T	U	D	H		
Q_1	3 25/32	2 1/2	3/4	1 3/4	9/32	1 31/32	17/32	2 7/8	4 1/8	3/4 - 2 11/16	3 1/2
R_1	3 5/32	2 7/8	7/8	2	9/32	2 1/4	5/8	4	5 3/8	1 1/8 - 3 3/4	7 1/2

M10 Specifications--Stock "M" Sheaves

PART NO.	Diameters		Bush	Type	Dimensions										Wt Less Bush
	OD	PD			ID	OL	F	L	P	C	H	G	X	E	
10M70Q	7.00	7.00	Q_1	6W	5 9/16	4 5/16	4 5/16	2 1/2	17/32	1 9/32	4 1/8	3/4	1 3/4	9/32	19.5
10M74Q	7.40	7.40	Q_1	6W	6	4 5/16	4 5/16	2 1/2	17/32	1 9/32	4 1/8	3/4	1 3/4	9/32	22.4
10M76Q	7.60	7.60	Q_1	6W	6	4 5/16	4 5/16	2 1/2	17/32	1 9/32	4 1/8	3/4	1 3/4	9/32	24.0
10M80Q	8.00	8.00	Q_1	6W	6 9/16	4 5/16	4 5/16	2 1/2	17/32	1 9/32	4 1/8	3/4	1 3/4	9/32	25.3
10M84Q	8.40	8.40	Q_1	6W	6 9/16	4 5/16	4 5/16	2 1/2	17/32	1 9/32	4 1/8	3/4	1 3/4	9/32	26.0
10M86Q	8.60	8.60	Q_1	6W	7 1/8	4 5/16	4 5/16	2 1/2	17/32	1 9/32	4 1/8	3/4	1 3/4	9/32	27.1
10M90R	9.00	9.00	R_1	6W	7 1/4	4 5/16	4 5/16	2 7/8	9/32	1 5/32	5 3/8	7/8	2	9/32	28.5
10M92R	9.20	9.20	R_1	6W	7 1/4	4 5/16	4 5/16	2 7/8	9/32	1 5/32	5 3/8	7/8	2	9/32	30.0
10M96R	9.60	9.60	R_1	6W	7 3/8	4 5/16	4 5/16	2 7/8	9/32	1 5/32	5 3/8	7/8	2	9/32	30.8
10M100R	10.00	10.00	R_1	6W	7 15/16	4 5/16	4 5/16	2 7/8	9/32	1 5/32	5 3/8	7/8	2	9/32	32.5
10M106R	10.60	10.60	R_1	6W	8 1/2	4 5/16	4 5/16	2 7/8	9/32	1 5/32	5 3/8	7/8	2	9/32	35.5
10M110R	11.00	11.00	R_1	4A	8 13/16	4 5/16	4 5/16	2 7/8	9/32	1 5/32	5 3/8	7/8	2	9/32	38.0
10M120R	12.00	12.00	R_1	4A	10 5/16	4 5/16	4 5/16	2 7/8	9/32	1 5/32	5 3/8	7/8	2	9/32	39.1
10M130R	13.00	13.00	R_1	4A	11 1/4	4 5/16	4 5/16	2 7/8	9/32	1 5/32	5 3/8	7/8	2	9/32	41.4
10M140R	14.00	14.00	R_1	4A	12 1/4	4 5/16	4 5/16	2 7/8	9/32	1 5/32	5 3/8	7/8	2	9/32	45.5
10M150R	15.00	15.00	R_1	4A	13 1/4	4 5/16	4 5/16	2 7/8	9/32	1 5/32	5 3/8	7/8	2	9/32	47.4
10M160R	16.00	16.00	R_1	4A	14 9/16	4 5/16	4 5/16	2 7/8	9/32	1 5/32	5 3/8	7/8	2	9/32	51.0
10M180R	18.00	18.00	R_1	4A	16 1/4	4 5/16	4 5/16	2 7/8	9/32	1 5/32	5 3/8	7/8	2	9/32	60.3
10M200R	20.00	20.00	R_1	4A	18 1/4	4 5/16	4 5/16	2 7/8	9/32	1 5/32	5 3/8	7/8	2	9/32	68.3
10M240R	24.00	24.00	R_1	4A	22 3/16	4 5/16	4 5/16	2 7/8	9/32	1 5/32	5 3/8	7/8	2	9/32	84.5
10M300R	30.00	30.00	R_1	4A	28 1/2	4 5/16	4 5/16	2 7/8	9/32	1 5/32	5 3/8	7/8	2	9/32	119.0
10M360R	36.00	36.00	R_1	4A	34 3/16	4 5/16	4 5/16	2 7/8	9/32	1 5/32	5 3/8	7/8	2	9/32	171.0
10M440R	44.00	44.00	R_1	4A	42 3/16	4 5/16	4 5/16	2 7/8	9/32	1 5/32	5 3/8	7/8	2	9/32	218.0

Taper Bore Poly-V Sheaves STL

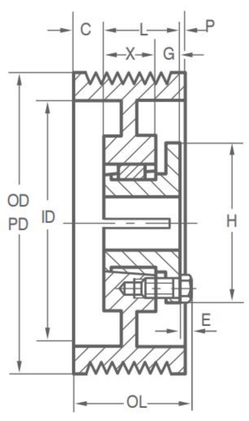

TYPE 6W

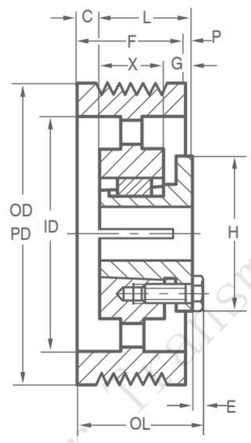

TYPE 4A

STL Bushing Dimensions

Part No.	Dimensions									Bore Range	Wt Lbs.
	M	L	G	X	E	T	U	D	H		
R1	3 5/32	2 7/8	7/8	2	9/32	2 1/4	5/8	4	5 3/8	1 1/8 - 3 3/4	7 1/2
R2	5 5/32	4 7/8	7/8	4	9/32	4 1/4	5/8	4	5 3/8	1 3/8 - 3 5/8	11
S1	4 3/4	4 3/8	1 1/16	3 5/16	3/8	3 5/8	3/4	4 5/8	6 3/8	1 11/16 - 4 1/4	13 1/2

M12 Specifications--Stock "M" Sheaves

PART NO.	Diameters		Bushi	Type	Dimensions										Wt Less Bush
	OD	PD			ID	OL	F	L	P	C	H	G	X	E	
12M90R	9.00	9.00	R1	6W	7 1/4	5 1/16	5 1/16	2 7/8	21/32	1 17/32	5 3/8	7/8	2	9/32	31.6
12M92R	9.20	9.20	R1	6W	7 3/8	5 1/16	5 1/16	2 7/8	21/32	1 17/32	5 3/8	7/8	2	9/32	33.5
12M96R	9.60	9.60	R1	6W	7 3/8	5 1/16	5 1/16	2 7/8	21/32	1 17/32	5 3/8	7/8	2	9/32	34.3
12M100R	10.00	10.00	R1	6W	7 15/16	5 1/16	5 1/16	2 7/8	21/32	1 17/32	5 3/8	7/8	2	9/32	35.0
12M106R	10.60	10.60	R1	6W	8 1/2	5 1/16	5 1/16	2 7/8	21/32	1 17/32	5 3/8	7/8	2	9/32	39.4
12M110R	11.00	11.00	R1	4A	8 13/16	5 1/16	5 1/16	2 7/8	21/32	1 17/32	5 3/8	7/8	2	9/32	40.5
12M120R	12.00	12.00	R1	4A	10 5/16	5 1/16	5 1/16	2 7/8	21/32	1 17/32	5 3/8	7/8	2	9/32	41.4
12M130R	13.00	13.00	R1	4A	11 1/4	5 1/16	5 1/16	2 7/8	21/32	1 17/32	5 3/8	7/8	2	9/32	45.3
12M140R	14.00	14.00	R1	4A	12 1/4	5 1/16	5 1/16	2 7/8	21/32	1 17/32	5 3/8	7/8	2	9/32	49.4
12M150R	15.00	15.00	R1	4A	13 1/4	5 1/16	5 1/16	2 7/8	21/32	1 17/32	5 3/8	7/8	2	9/32	51.0
12M160R	16.00	16.00	R1	4A	14 1/4	5 1/16	5 1/16	2 7/8	21/32	1 17/32	5 3/8	7/8	2	9/32	56.0
12M180R	18.00	18.00	R1	4A	16 1/4	5 1/16	5 1/16	2 7/8	21/32	1 17/32	5 3/8	7/8	2	9/32	64.5
12M200R	20.00	20.00	R1	4A	18 3/16	5 1/16	5 1/16	2 7/8	21/32	1 17/32	5 3/8	7/8	2	9/32	71.5
12M240R	24.00	24.00	R1	4A	22 3/16	5 1/16	5 1/16	2 7/8	21/32	1 17/32	5 3/8	7/8	2	9/32	91.5
12M300R	30.00	30.00	R1	4A	28 3/16	5 1/16	5 1/16	2 7/8	21/32	1 17/32	5 3/8	7/8	2	9/32	129.0
12M360R	36.00	36.00	R1	4A	34 3/16	5 1/16	5 1/16	2 7/8	21/32	1 17/32	5 3/8	7/8	2	9/32	190.0
12M440R	44.00	44.00	R1	4A	42 3/16	5 1/16	5 1/16	2 7/8	21/32	1 17/32	5 3/8	7/8	2	9/32	237.0

M14 Specifications--Stock "M" Sheaves

PART NO.	Diameters		Bush	Type	Dimensions										Wt Less Bush
	OD	PD			ID	OL	F	L	P	C	H	G	X	E	
14M90R	9.00	9.00	R2	6W	7 1/4	6 1/16	5 13/16	4 7/8	1/32	29/32	5 3/8	7/8	4	9/32	49.8
14M92R	9.20	9.20	R2	6W	7 1/4	6 1/16	5 13/16	4 7/8	1/32	29/32	5 3/8	7/8	4	9/32	53.0
14M96R	9.60	9.60	R2	6W	7 3/8	6 1/16	5 13/16	4 7/8	1/32	29/32	5 3/8	7/8	4	9/32	54.0
14M100R	10.00	10.00	R2	6W	7 15/16	6 1/16	5 13/16	4 7/8	1/32	29/32	5 3/8	7/8	4	9/32	55.0
14M106R	10.60	10.60	R2	6W	8 1/2	6 1/16	5 13/16	4 7/8	1/32	29/32	5 3/8	7/8	4	9/32	59.8
14M110R	11.00	11.00	R2	6W	8 13/16	6 1/16	5 13/16	4 7/8	1/32	29/32	5 3/8	7/8	4	9/32	60.5
14M120S	12.00	12.00	S1	6A	10 15/16	6	5 13/16	4 3/8	3/16	1 1/4	6 3/8	1 1/16	3 5/16	3/8	64.0
14M130S	13.00	13.00	S1	6A	11 1/4	6	5 13/16	4 3/8	3/16	1 1/4	6 3/8	1 1/16	3 5/16	3/8	71.5
14M140S	14.00	14.00	S1	6A	12 1/4	6	5 13/16	4 3/8	3/16	1 1/4	6 3/8	1 1/16	3 5/16	3/8	77.5
14M150S	15.00	15.00	S1	6A	13 1/4	6	5 13/16	4 3/8	3/16	1 1/4	6 3/8	1 1/16	3 5/16	3/8	81.5
14M160S	16.00	16.00	S1	6A	14 1/4	6	5 13/16	4 3/8	3/16	1 1/4	6 3/8	1 1/16	3 5/16	3/8	87.0
14M180S	18.00	18.00	S1	6A	16 1/4	6	5 13/16	4 3/8	3/16	1 1/4	6 3/8	1 1/16	3 5/16	3/8	96.5
14M200S	20.00	20.00	S1	6A	18 3/16	6	5 13/16	4 3/8	3/16	1 1/4	6 3/8	1 1/16	3 5/16	3/8	109.0
14M240S	24.00	24.00	S1	6A	22 3/16	6	5 13/16	4 3/8	3/16	1 1/4	6 3/8	1 1/16	3 5/16	3/8	131.0
14M300S	30.00	30.00	S1	6A	28 3/16	6	5 13/16	4 3/8	3/16	1 1/4	6 3/8	1 1/16	3 5/16	3/8	168.0
14M360S	36.00	36.00	S1	6A	34 3/16	6	5 13/16	4 3/8	3/16	1 1/4	6 3/8	1 1/16	3 5/16	3/8	223.0
14M440S	44.00	44.00	S1	6A	42 3/16	6	5 13/16	4 3/8	3/16	1 1/4	6 3/8	1 1/16	3 5/16	3/8	280.0

Taper Bore Poly-V Sheaves STL

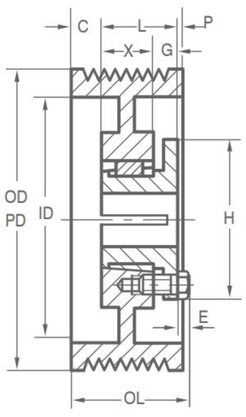

TYPE 6W

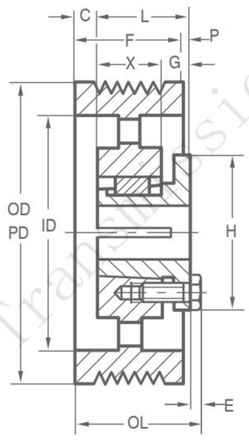

TYPE 4A

Standard Keyseats

Bore	Bushing	Bore	Keyseat
3/4" - 7/8"	3/16" x 3/32"	2 5/16" - 2 3/4"	5/8" x 5/16"
15/16 - 1 1/4	1/4" x 1/8"	2 13/16 - 3 1/4	3/4 x 3/8
1 5/16 - 1 3/8	5/16 x 5/32	3 3/8 - 3 3/4	7/8 x 7/16
1 7/16 - 1 3/4	3/8 x 3/16	3 7/8 - 4 1/4	1 x 1/2
1 13/16 - 2 1/4	1/2 x 1/4		

1 3/8" Bore Bushings(except R2) also available with 3/8"x3/16" Keyseat.

M16 Specifications--Stock "M" Sheaves

PART NO.	Diameters		Bush	Type	Dimensions										Wt Less Bush
	OD	PD			ID	OL	F	L	P	C	H	G	X	E	
16M90R	9.00	9.00	R2	6W	7 1/4	6 9/16	6 9/16	4 7/8	13/32	1 9/32	5 3/8	7/8	4	9/32	53.5
16M92R	9.20	9.20	R2	6W	7 3/8	6 9/16	6 9/16	4 7/8	13/32	1 9/32	5 3/8	7/8	4	9/32	55.5
16M96R	9.60	9.60	R2	6W	7 7/8	6 9/16	6 9/16	4 7/8	13/32	1 9/32	5 3/8	7/8	4	9/32	58.5
16M100R	10.00	10.00	R2	6W	7 15/16	6 9/16	6 9/16	4 7/8	13/32	1 9/32	5 3/8	7/8	4	9/32	59.8
16M106R	10.60	10.60	R2	6W	8 1/2	6 9/16	6 9/16	4 7/8	13/32	1 9/32	5 3/8	7/8	4	9/32	60.0
16M110R	11.00	11.00	R2	4A	8 13/16	6 9/16	6 9/16	4 7/8	13/32	1 9/32	5 3/8	7/8	4	9/32	64.5
16M120S	12.00	12.00	S1	4A	10 15/16	6 9/16	6 9/16	4 3/8	9/16	1 5/8	6 3/8	1 1/16	3 5/16	3/8	67.0
16M130S	13.00	13.00	S1	4A	11 1/4	6 9/16	6 9/16	4 3/8	9/16	1 5/8	6 3/8	1 1/16	3 5/16	3/8	74.0
16M140S	14.00	14.00	S1	4A	12 1/4	6 9/16	6 9/16	4 3/8	9/16	1 5/8	6 3/8	1 1/16	3 5/16	3/8	80.0
16M150S	15.00	15.00	S1	4A	13 1/4	6 9/16	6 9/16	4 3/8	9/16	1 5/8	6 3/8	1 1/16	3 5/16	3/8	86.0
16M160S	16.00	16.00	S1	4A	14 1/4	6 9/16	6 9/16	4 3/8	9/16	1 5/8	6 3/8	1 1/16	3 5/16	3/8	91.0
16M180S	18.00	18.00	S1	4A	16 1/4	6 9/16	6 9/16	4 3/8	9/16	1 5/8	6 3/8	1 1/16	3 5/16	3/8	104.0
16M200S	20.00	20.00	S1	4A	18 3/16	6 9/16	6 9/16	4 3/8	9/16	1 5/8	6 3/8	1 1/16	3 5/16	3/8	113.0
16M240S	24.00	24.00	S1	4A	22 3/16	6 9/16	6 9/16	4 3/8	9/16	1 5/8	6 3/8	1 1/16	3 5/16	3/8	140.0
16M300S	30.00	30.00	S1	4A	28 3/16	6 9/16	6 9/16	4 3/8	9/16	1 5/8	6 3/8	1 1/16	3 5/16	3/8	182.0
16M360S	36.00	36.00	S1	4A	34 3/16	6 9/16	6 9/16	4 3/8	9/16	1 5/8	6 3/8	1 1/16	3 5/16	3/8	235.0
16M440S	44.00	44.00	S1	4A	42 3/16	6 9/16	6 9/16	4 3/8	9/16	1 5/8	6 3/8	1 1/16	3 5/16	3/8	300.0

M20 Specifications--Stock "M" Sheaves

PART NO.	Diameters		Bush	Type	Dimensions										Wt Less Bush
	OD	PD			ID	OL	F	L	P	C	H	G	X	E	
20M90R	9.00	9.00	R2	6W	7 1/4	8	8	4 7/8	1 1/2	1 5/8	5 3/8	7/8	4	9/32	57.5
20M92R	9.20	9.20	R2	6W	7 3/8	8	8	4 7/8	1 1/2	1 5/8	5 3/8	7/8	4	9/32	60.0
20M96R	9.60	9.60	R2	6W	7 7/8	8	8	4 7/8	1 1/2	1 5/8	5 3/8	7/8	4	9/32	63.5
20M100R	10.00	10.00	R2	6W	7 15/16	8	8	4 7/8	1 1/2	1 5/8	5 3/8	7/8	4	9/32	64.0
20M106R	10.60	10.60	R2	6W	8 1/2	8	8	4 7/8	1 1/2	1 5/8	5 3/8	7/8	4	9/32	70.0
20M110R	11.00	11.00	R2	4A	8 13/16	8	8	4 7/8	1 1/8	2	5 3/8	7/8	4	9/32	71.0
20M120S	12.00	12.00	S1	4A	10 15/16	8	8	4 3/8	1 9/32	2 11/32	6 3/8	1 1/16	3 5/16	3/8	74.0
20M130S	13.00	13.00	S1	4A	11 1/4	8	8	4 3/8	1 9/32	2 11/32	6 3/8	1 1/16	3 5/16	3/8	84.5
20M140S	14.00	14.00	S1	4A	12 1/4	8	8	4 3/8	1 9/32	2 11/32	6 3/8	1 1/16	3 5/16	3/8	90.5
20M150S	15.00	15.00	S1	4A	13 1/4	8	8	4 3/8	1 9/32	2 11/32	6 3/8	1 1/16	3 5/16	3/8	96.5
20M160S	16.00	16.00	S1	4A	14 1/4	8	8	4 3/8	1 9/32	2 11/32	6 3/8	1 1/16	3 5/16	3/8	100.0
20M180S	18.00	18.00	S1	4A	16 1/4	8	8	4 3/8	1 9/32	2 11/32	6 3/8	1 1/16	3 5/16	3/8	112.0
20M200S	20.00	20.00	S1	4A	18 3/16	8	8	4 3/8	1 9/32	2 11/32	6 3/8	1 1/16	3 5/16	3/8	127.0
20M240S	24.00	24.00	S1	4A	22 3/16	8	8	4 3/8	1 9/32	2 11/32	6 3/8	1 1/16	3 5/16	3/8	156.0
20M300S	30.00	30.00	S1	4A	28 3/16	8	8	4 3/8	1 9/32	2 11/32	6 3/8	1 1/16	3 5/16	3/8	205.0
20M360S	36.00	36.00	S1	4A	34 3/16	8	8	4 3/8	1 9/32	2 11/32	6 3/8	1 1/16	3 5/16	3/8	264.0
20M440S	44.00	44.00	S1	4A	42 3/16	8	8	4 3/8	1 9/32	2 11/32	6 3/8	1 1/16	3 5/16	3/8	335.0