# Worm and Worm Gears

## 3DP

**14 1/2°** Pressure Angle

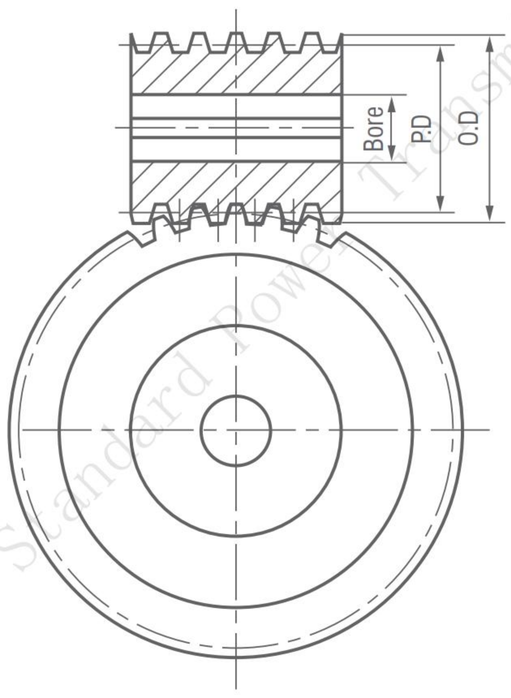


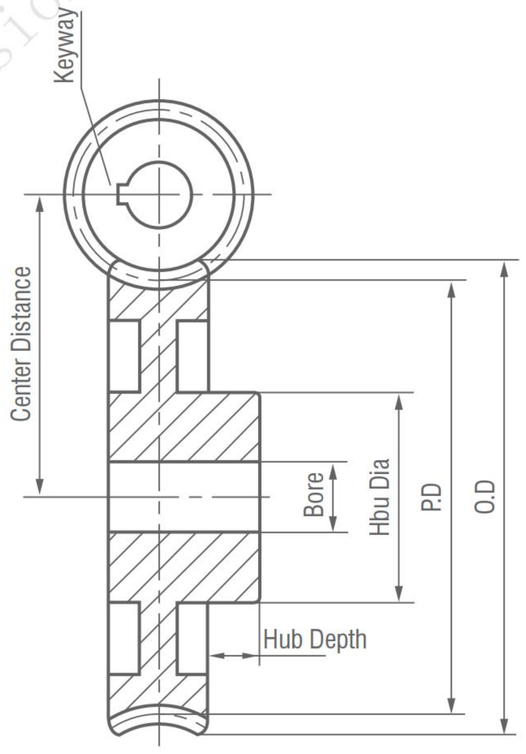




CSP

## Right Hand Single Thread -- Stocked Right Hand Only

### 3DP 2" Face

### Cast Iron and Bronze

| PART NUMBER | Z | PD | Bore | Hub Dia | Hub Depth | wt Lbs | Style |
|---|---|---|---|---|---|---|---|
| WG318 | 18 | 6.00 | 1 | 3 | 1 1/2 | 16.2 | CWE.CSP |
| WG324 | 24 | 8.00 | 1 1/2 | 3 1/2 | 1 1/2 | 22.8 | CSP |
| WG330 | 30 | 10.00 | 1 1/2 | 3 1/2 | 1 1/2 | 30.2 | CSP |
| WG336 | 36 | 12.00 | 1 1/2 | 3 1/2 | 1 1/2 | 36.4 | CSP |
| WG354 | 54 | 18.00 | 1 1/2 | 4 | 1 1/2 | 60.2 | CSP |

## 1 Single Steel -- 4° 46' Helix Angle Worms

## W3-S



CWE



CPL

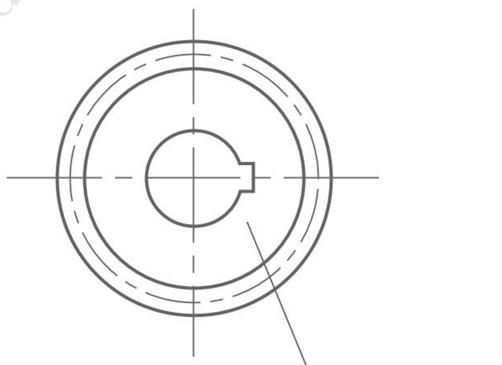


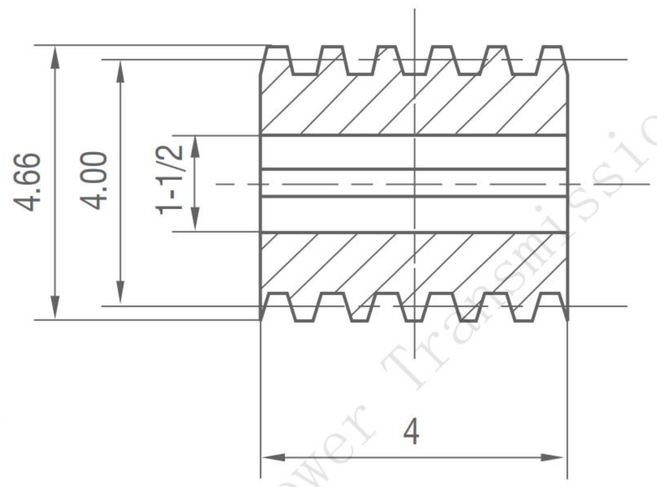

# Worm and Worm Gears

**4DP**

**14 1/2 °** Pressure Angle

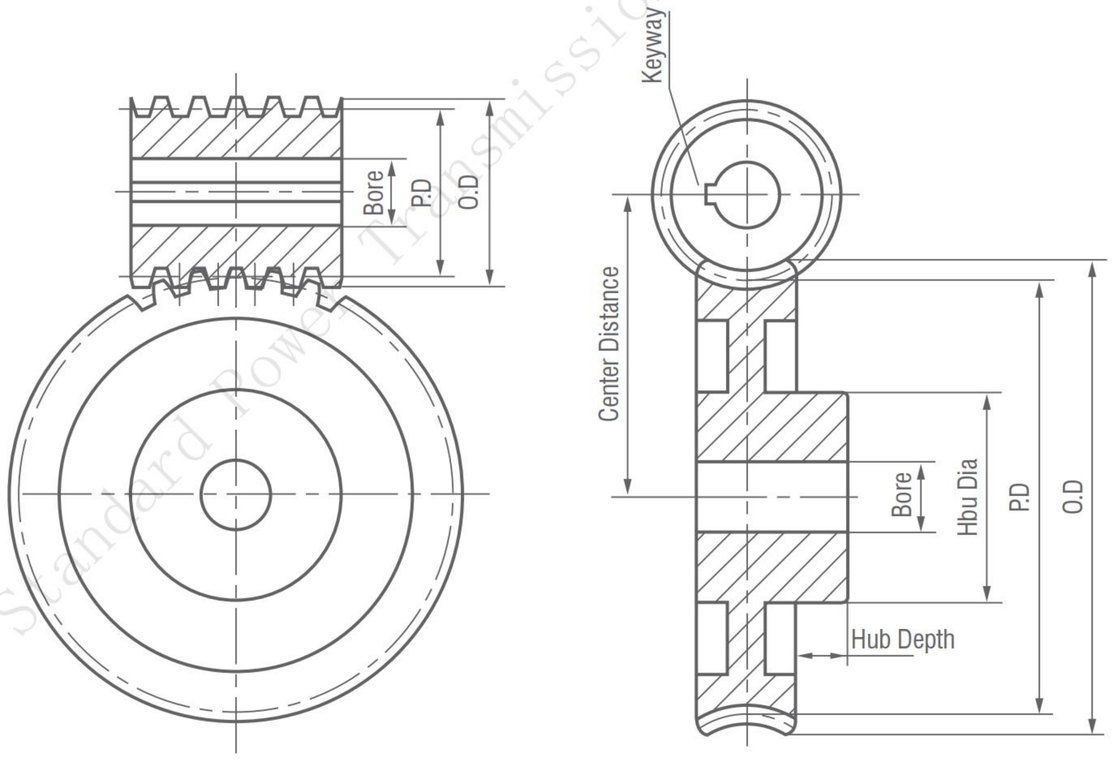




## Right Hand Single Thread -- Stocked Right Hand Only

### 4DP 1 1/2" Face — Cast Iron and Bronze

| PART NUMBER | Z | PD | Bore | Hub Dia | Hub Depth | wt Lbs | Style |
|---|---|---|---|---|---|---|---|
| WG420 | 20 | 5.00 | 1 | 2 1/2 | 1 1/4 | 8.4 | CWE,CSP |
| WG424 | 24 | 6.00 | 1 | 2 1/2 | 1 1/4 | 12.9 | CWE,CSP |
| WG432 | 32 | 8.00 | 1 1/4 | 3 | 1 1/4 | 15.6 | CWE,CSP |
| WG440 | 40 | 10.00 | 1 1/4 | 3 | 1 1/4 | 27.5 | CWE,CSP |
| WG448 | 48 | 12.00 | 1 1/2 | 4 | 1 1/4 | 34.1 | CWE,CSP |
| WG464 | 64 | 16.00 | 1 1/2 | 4 | 1 1/4 | 43.9 | CSP |

## 1 Single Steel -- 4°46' Helix Angle Worms

**W4-S**

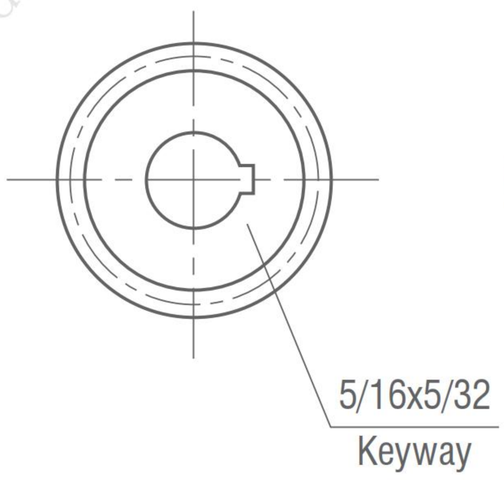




CWE



CPL

# Worm and Worm Gears

**6DP**

**14 1/2°** *Pressure Angle*

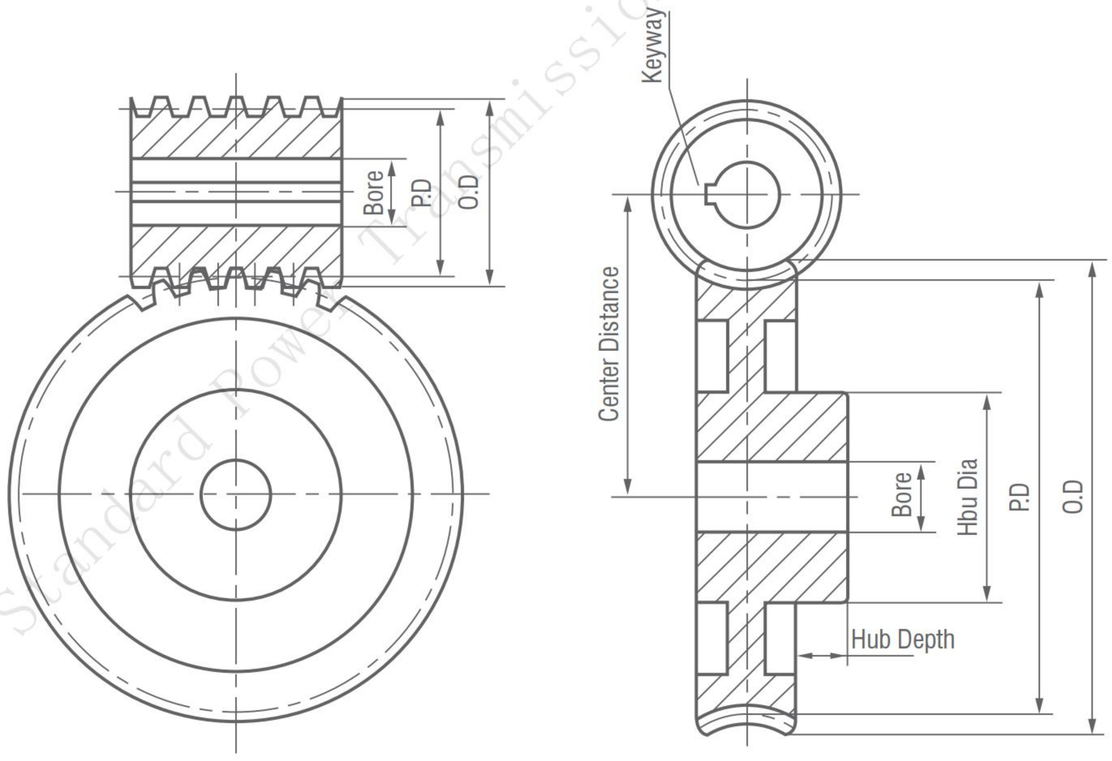




**CSP**

## Right Hand Single Thread -- Stocked Right Hand Only

### 6DP 1" Face

### Cast Iron and Bronze

| PART NUMBER | Z | PD | Bore | Hub Dia | Hub Depth | wt Lbs | Style |
|---|---|---|---|---|---|---|---|
| WG620 | 20 | 3.333 | 3/4 | 1 7/8 | 7/8 | 2.5 | CWE,CSP |
| WG624 | 24 | 4.000 | 3/4 | 1 7/8 | 7/8 | 3.6 | CWE,CSP |
| WG630 | 30 | 5.000 | 7/8 | 2 1/4 | 7/8 | 5.0 | CWE,CSP |
| WG636 | 36 | 6.000 | 1 | 2 1/2 | 7/8 | 6.0 | CWE,CSP |
| WG640 | 40 | 6.667 | 1 | 2 1/2 | 7/8 | 7.6 | CWE,CSP |
| WG648 | 48 | 8.000 | 1 1/4 | 2 3/4 | 1 | 9.2 | CWE,CSP |
| WG660 | 60 | 10.000 | 1 1/4 | 3 | 1 1/4 | 13.7 | CWE,CSP |
| WG672 | 72 | 12.000 | 1 1/4 | 3 | 1 1/4 | 14.9 | CWE,CSP |

## 1 Single Steel -- 4° 46' Helix Angle Worms

**W6-S**



**CWE**



**CPL**

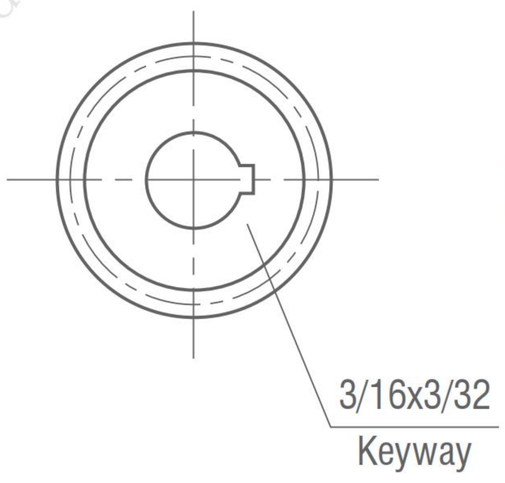


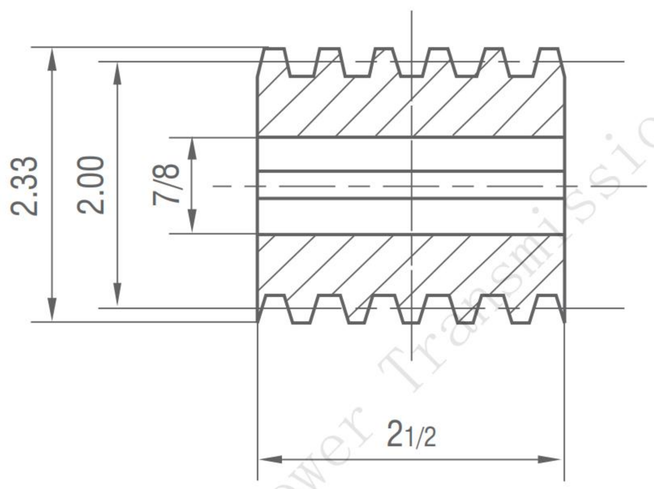

# Worm and Worm Gears

**6DP**

**14 1/2°** *Pressure Angle*

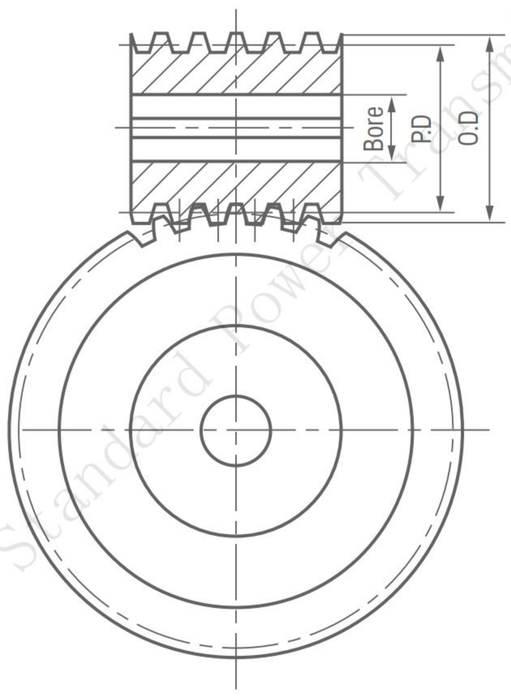


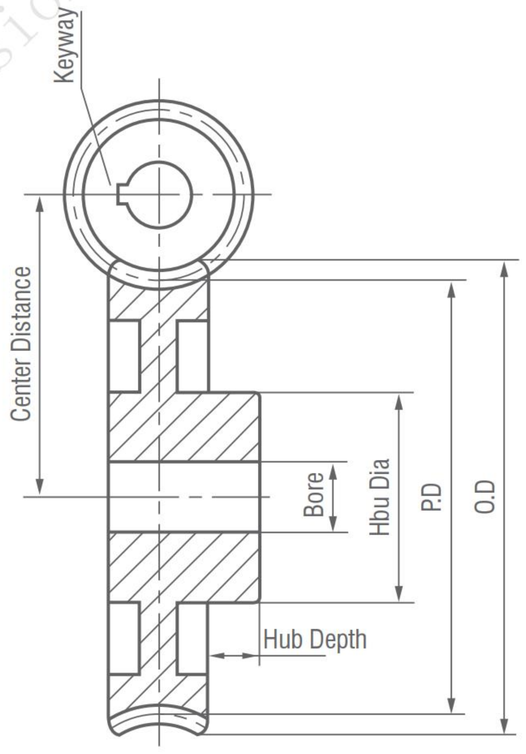




**CSP**

## Right Hand Double Thread -- Stocked Right Hand Only

### 6DP 1" Face

### Cast Iron and Bronze

| PART NUMBER | Z | PD | Bore | Hub Dia | Hub Depth | wt Lbs | Style |
|---|---|---|---|---|---|---|---|
| WG620D | 20 | 3.333 | 1 | 2 3/4 | 1 | 3.3 | CPL |
| WG624D | 24 | 4.000 | 1 1/4 | 2 3/4 | 1 | 4.1 | CPL |
| WG630D | 30 | 5.000 | 1 1/4 | 2 3/4 | 1 | 5.2 | CWE,CSP |
| WG640D | 40 | 6.667 | 1 1/4 | 2 3/4 | 1 | 7.6 | CWE,CSP |

## 2 Double Steel -- 9° 28' Helix Angle Worms

**W6-D**



**CWE**



**CPL**

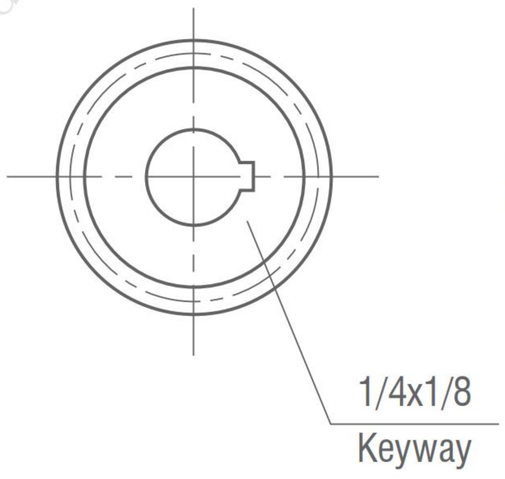


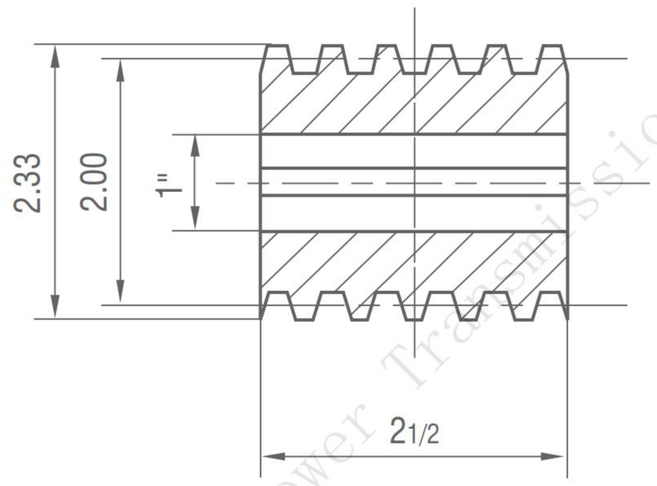

# Worm and Worm Gears

**6DP**

**14 1/2°** *Pressure Angle*

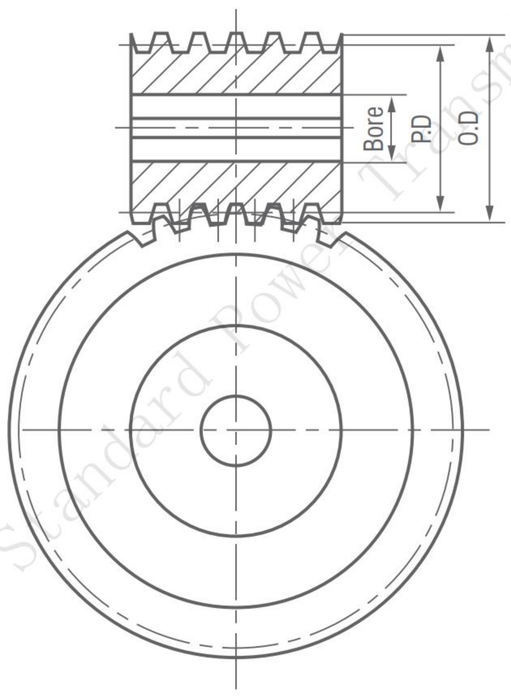


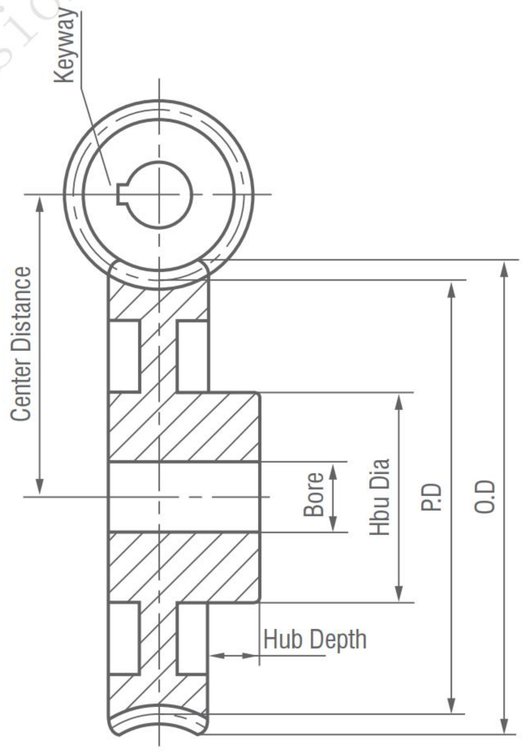




CSP

## Right Hand Quadruple Thread -- Stocked Right Hand Only

### 6DP 1" Face — Cast Iron and Bronze

| PART NUMBER | Z | PD | Bore | Hub Dia | Hub Depth | wt Lbs | Style |
|---|---|---|---|---|---|---|---|
| WG620Q | 20 | 3.333 | 1 | 2 3/4 | 1 | 3.4 | CPL |
| WG624Q | 24 | 4.000 | 1 1/4 | 2 3/4 | 1 | 4.1 | CPL |

## 4 Quadruple Steel -- 18° 26' Helix Angle Worms

**W6-Q**



CWE



CPL

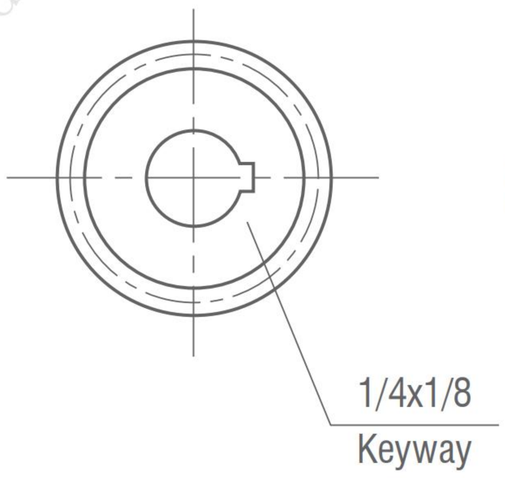


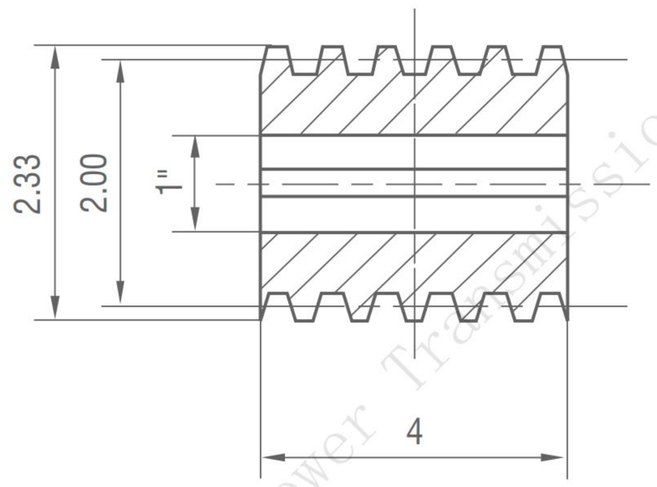

# Worm and Worm Gears

**14 1/2°** Pressure Angle

**8DP**

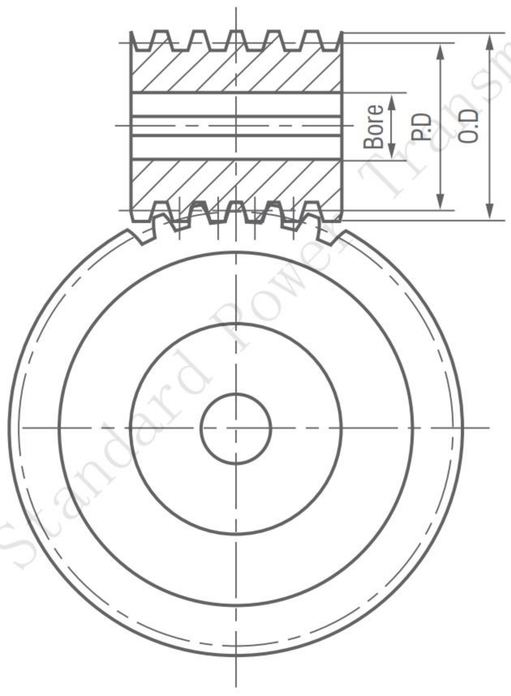


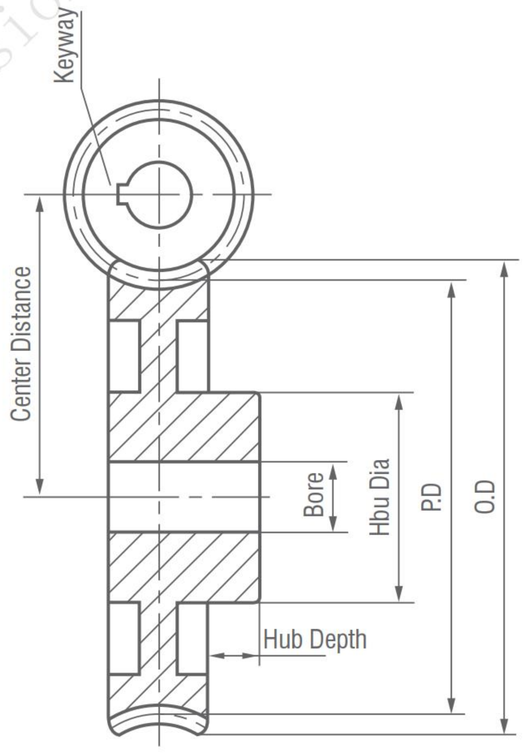




CSP

## Right Hand Single Thread -- Stocked Right Hand Only

### 8DP 3/4" Face

### Cast Iron and Bronze

| PART NUMBER | Z | PD | Bore | Hub Dia | Hub Depth | wt Lbs | Style |
|---|---|---|---|---|---|---|---|
| WG820 | 20 | 2.500 | 3/4 | 1 3/4 | 3/4 | 1.3 | CPL |
| WG830 | 30 | 3.750 | 3/4 | 1 3/4 | 3/4 | 2.4 | CPL |
| WG840 | 40 | 5.000 | 1 | 2 3/8 | 7/8 | 3.7 | CWE.CSP |
| WG848 | 48 | 6.000 | 1 | 2 3/8 | 7/8 | 4.5 | CWE.CSP |
| WG850 | 50 | 6.250 | 1 | 2 3/8 | 7/8 | 5.1 | CWE.CSP |
| WG860 | 60 | 7.500 | 1 | 2 1/2 | 7/8 | 6.1 | CWE.CSP |
| WG880 | 80 | 10.000 | 1 1/4 | 3 | 7/8 | 8.9 | CWE.CSP |

## 1 Single Steel -- 4°46' Helix Angle Worms

**W8-S**

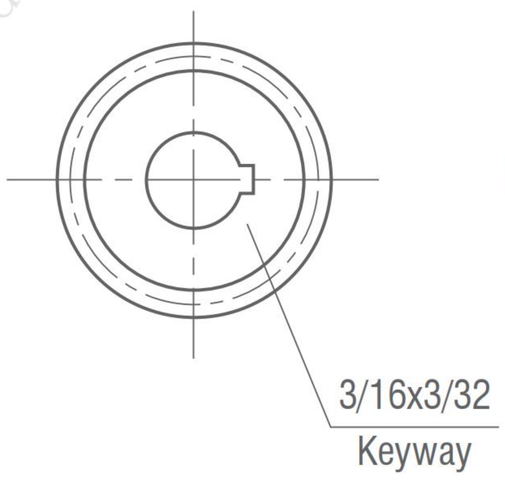


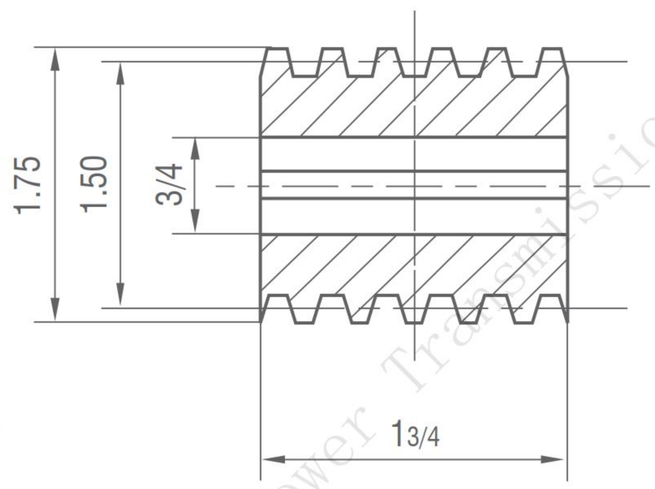




CWE



CPL

# Worm and Worm Gears

**8DP**

**14 1/2°** *Pressure Angle*

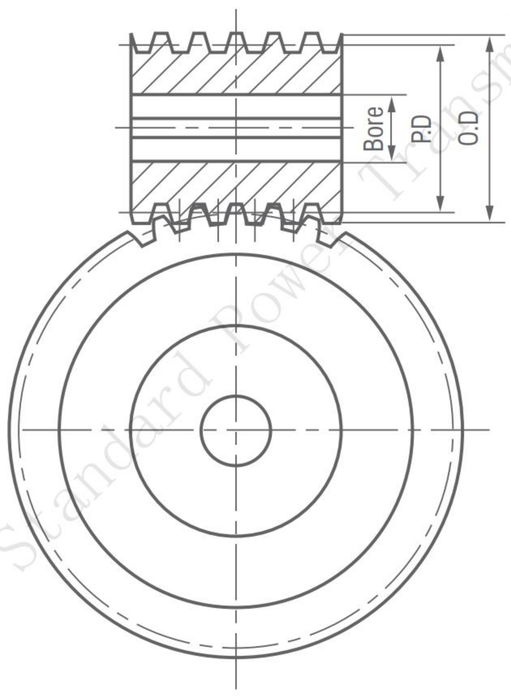


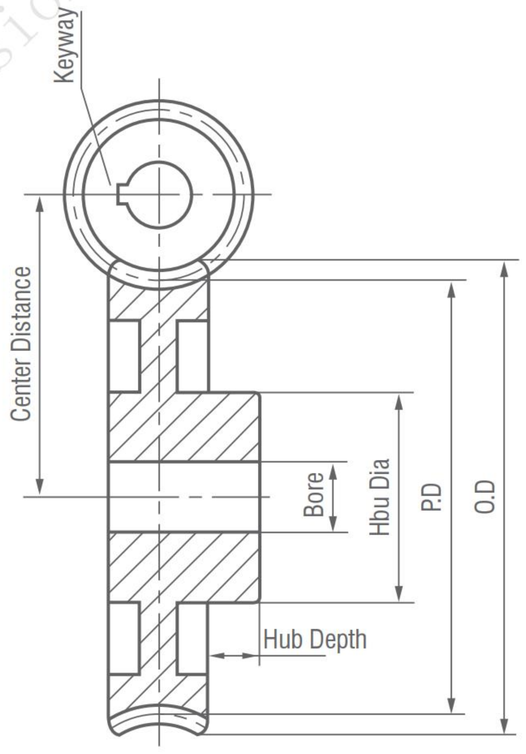




**CSP**

## Right Hand Double Thread -- Stocked Right Hand Only

### 8DP 3/4" Face

### Cast Iron and Bronze

| PART NUMBER | Z | PD | Bore | Hub Dia | Hub Depth | wt Lbs | Style |
|---|---|---|---|---|---|---|---|
| WG820D | 20 | 2.500 | 1 | 2 | 3/4 | 1.2 | CPL |
| WG830D | 30 | 3.750 | 1 | 2 1/4 | 3/4 | 2.5 | CPL,CSP |
| WG840D | 40 | 5.000 | 1 | 2 1/4 | 3/4 | 3.4 | CWE,CSP |

## 2 Double Steel -- 9° 28' Helix Angle Worms

**W8-D**

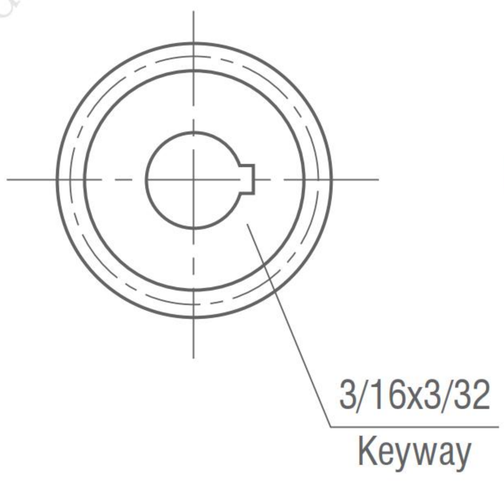


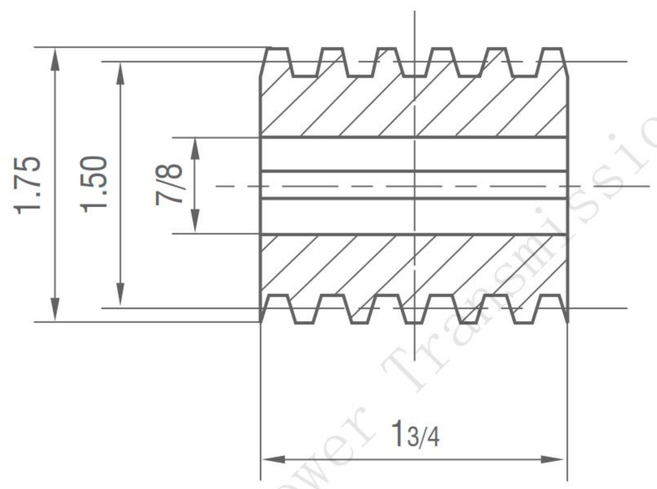




**CWE**



**CPL**

# Worm and Worm Gears

**8DP**

**14 1/2°** *Pressure Angle*

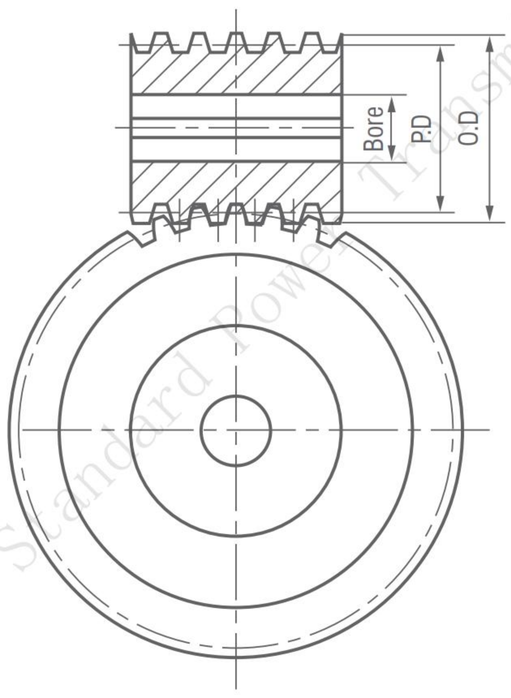


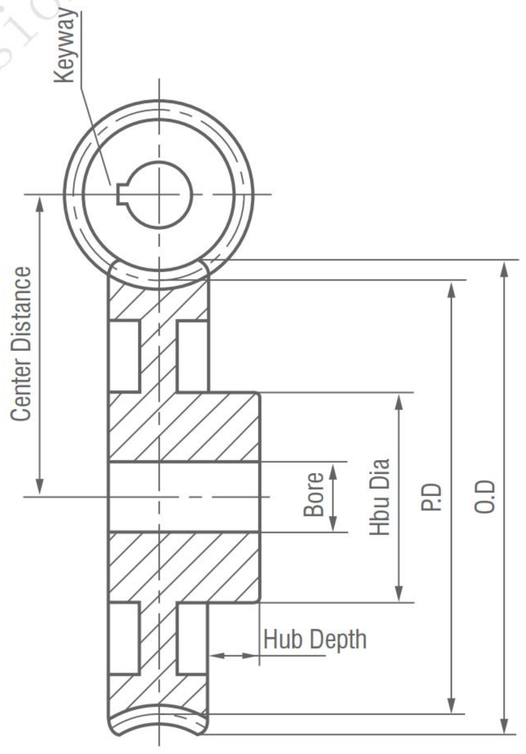




CSP

## Right Hand Quadruple Thread -- Stocked Right Hand Only

### 8DP 3/4" Face

### Cast Iron and Bronze

| PART NUMBER | Z | PD | Bore | Hub Dia | Hub Depth | wt Lbs | Style |
|---|---|---|---|---|---|---|---|
| WG820Q | 20 | 2.500 | 1 | 2 | 3/4 | 1.2 | CPL |
| WG830Q | 30 | 3.750 | 1 | 2 1/4 | 3/4 | 2.5 | CPL,CSP |

## 4 Quadruple Steel -- 18 26' Helix Angle Worms

**W8-Q**

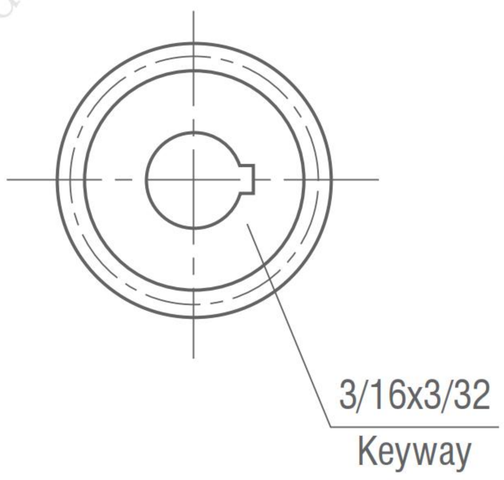




CWE



CPL

# Worm and Worm Gears

**14 1/2°** Pressure Angle

**10DP**

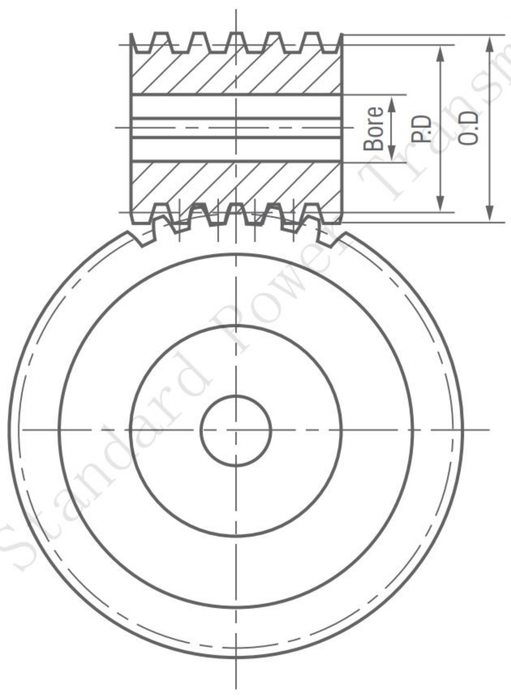


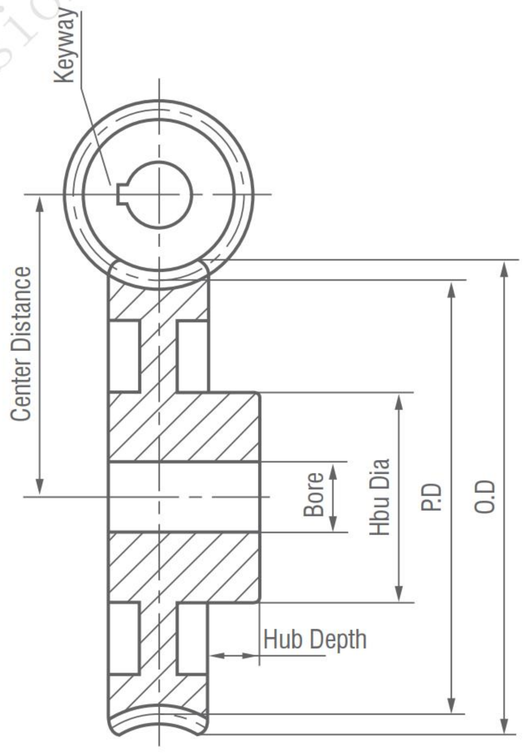




CSP

## Right Hand Single Thread -- Stocked Right Hand Only

### 10DP 5/8" Face

### Cast Iron and Bronze

| PART NUMBER | Z | PD | Bore | Hub Dia | Hub Depth | wt Lbs | Style |
|---|---|---|---|---|---|---|---|
| WG1020 | 20 | 2.00 | 1/2 | 1 1/4 | 3/4 | 0.7 | CPL |
| WG1030 | 30 | 3.00 | 5/8 | 1 3/4 | 3/4 | 1.5 | CPL |
| WG1040 | 40 | 4.00 | 5/8 | 1 3/4 | 3/4 | 1.8 | CWE,CSP |
| WG1050 | 50 | 5.00 | 3/4 | 2 | 3/4 | 2.8 | CWE,CSP |
| WG1060 | 60 | 6.00 | 3/4 | 2 | 3/4 | 3.6 | CWE,CSP |
| WG1080 | 80 | 8.00 | 3/4 | 2 | 3/4 | 4.8 | CWE,CSP |
| WG1080 | 100 | 10.00 | 3/4 | 2 | 3/4 | 6.0 | CWE,CSP |

## 1 Single Steel -- 4° 34' Helix Angle Worms

**W10-S**

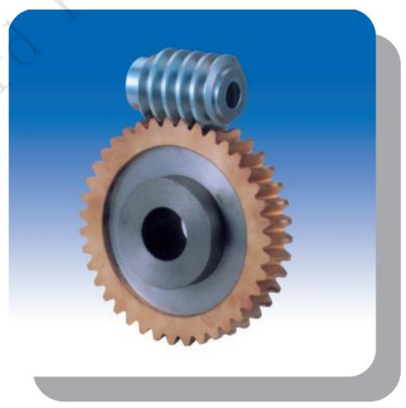

CWE



CPL

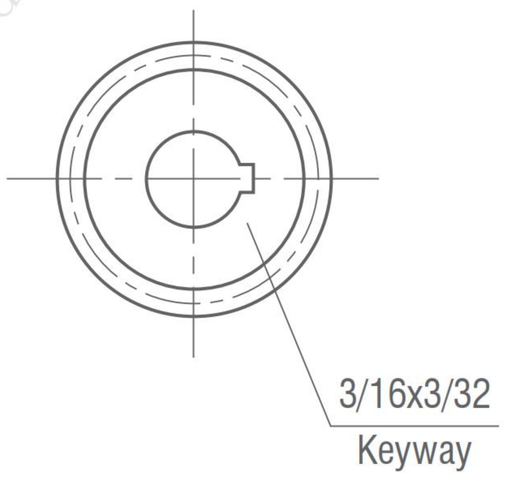


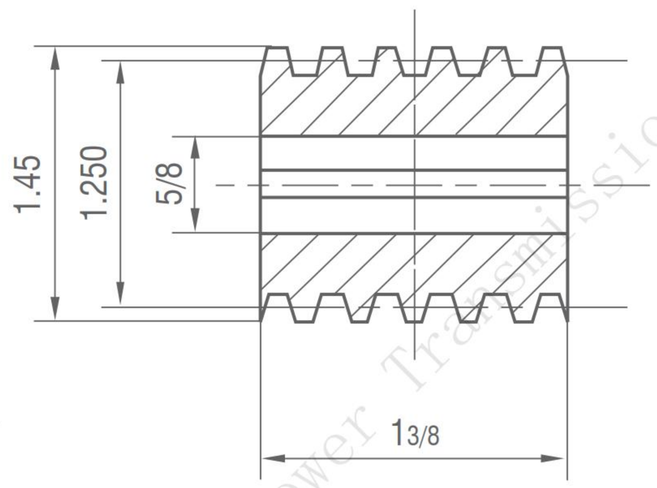

# Worm and Worm Gears

## 10DP

14 1/2° Pressure Angle

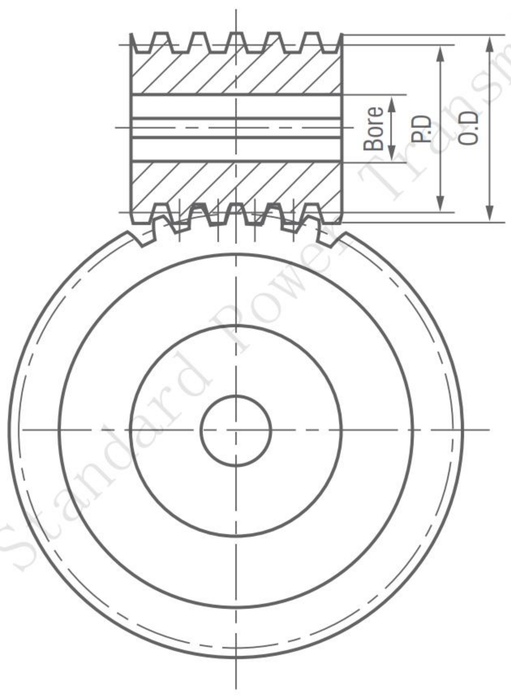


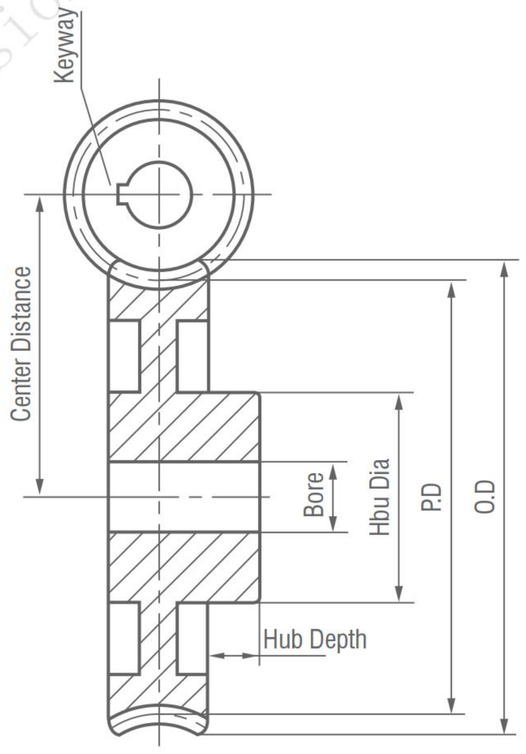




CSP

## Right Hand Double Thread -- Stocked Right Hand Only

### 10DP 5/8" Face

### Cast Iron and Bronze

| PART NUMBER | Z | PD | Bore | Hub Dia | Hub Depth | wt Lbs | Style |
|---|---|---|---|---|---|---|---|
| WG1020D | 20 | 2.00 | 7/8 | 1 5/8 | 5/8 | 0.65 | CPL |
| WG1030D | 30 | 3.00 | 7/8 | 1 3/4 | 5/8 | 1.3 | CPL,CSP |
| WG1040D | 40 | 4.00 | 7/8 | 1 3/4 | 5/8 | 1.6 | CWE,CSP |
| WG1050D | 50 | 5.00 | 7/8 | 2 | 1 | 2.9 | CWE,CSP |
| WG1060D | 60 | 6.00 | 7/8 | 2 | 1 | 3.0 | CWE,CSP |

## 2 Double Steel -- 9°5' Helix Angle Worms

## W10-D

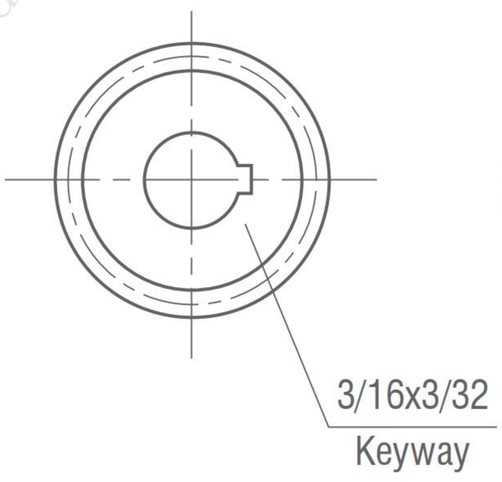


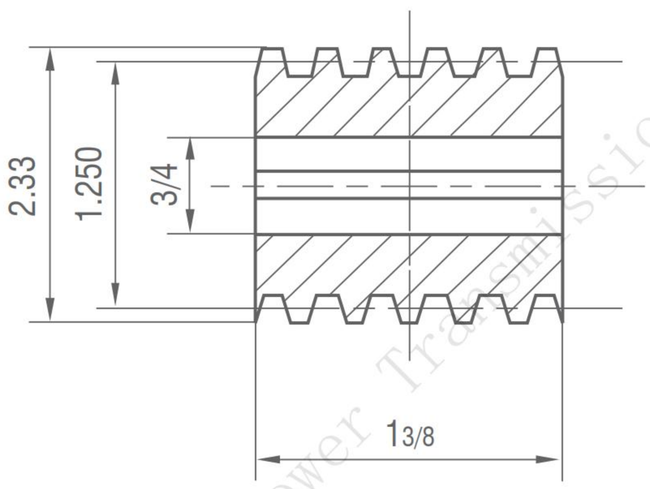




CWE



CPL

# Worm and Worm Gears

**14 1/2°** Pressure Angle

**10DP**

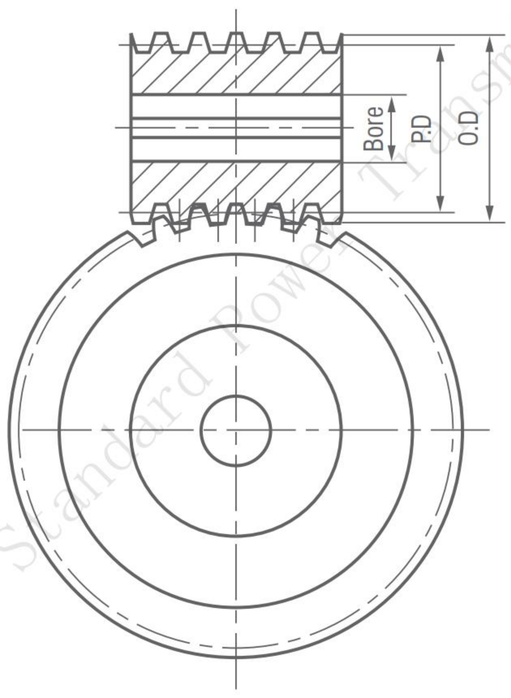


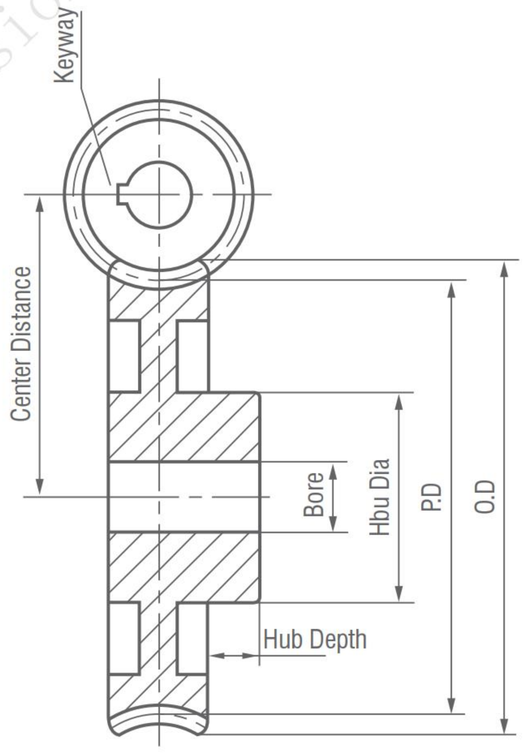




CSP

## Right Hand Quadruple Thread -- Stocked Right Hand Only

### 10DP 5/8" Face

### Cast Iron and Bronze

| PART NUMBER | Z | PD | Bore | Hub Dia | Hub Depth | wt Lbs | Style |
|---|---|---|---|---|---|---|---|
| WG1020Q | 20 | 2.00 | 7/8 | 1 5/8 | 5/8 | 0.64 | CPL |
| WG1030Q | 30 | 3.00 | 7/8 | 1 3/4 | 5/8 | 1.3 | CPL,CSP |
| WG1040 | 40 | 4.00 | 7/8 | 1 3/4 | 5/8 | 1.6 | CWE,CSP |

## 4 Single Steel -- 17° 45' Helix Angle Worms

**W10-Q**



CWE



CPL

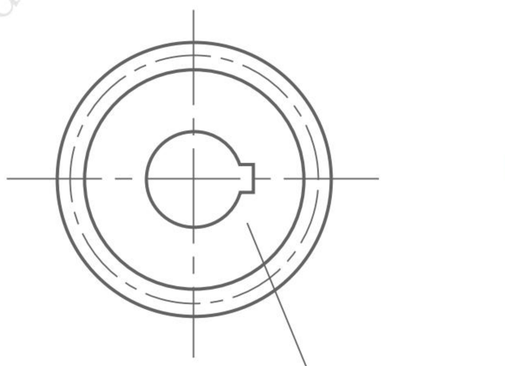


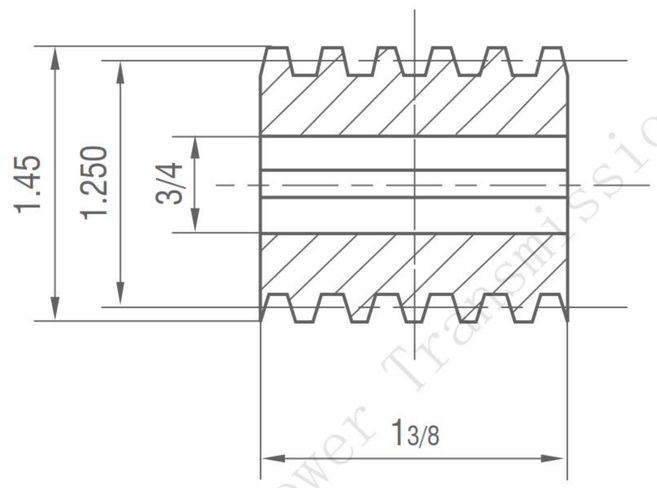

# Worm and Worm Gears

**14 1/2°** Pressure Angle

**12DP**

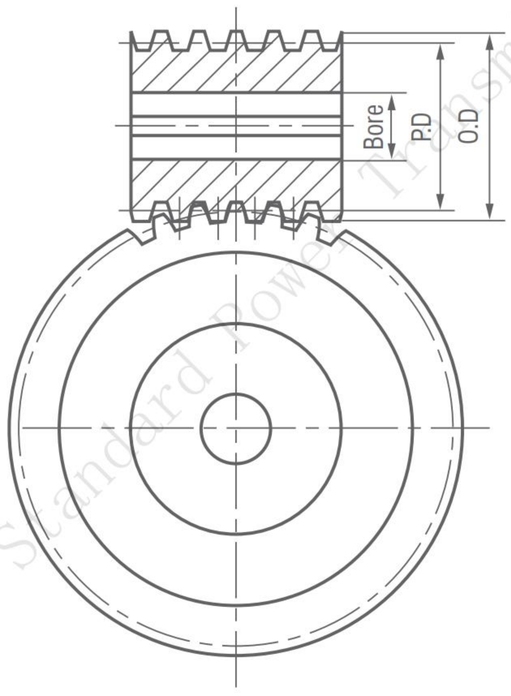


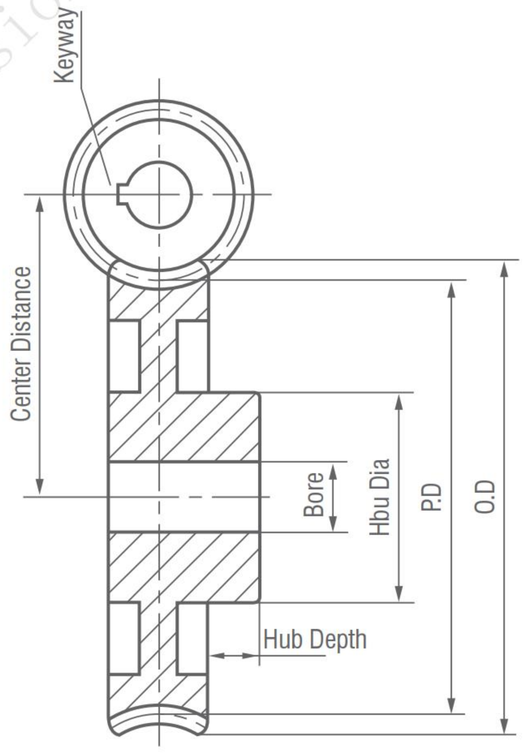




CSP

## Right Hand Single Thread -- Stocked Right Hand Only

### 12DP 1/2" Face — Cast Iron and Bronze

| PART NUMBER | Z | PD | Bore | Hub Dia | Hub Depth | wt Lbs | Style |
|---|---|---|---|---|---|---|---|
| WG1220 | 20 | 1.660 | 1/2 | 1 1/4 | 5/8 | 0.35 | CPL |
| WG1230 | 30 | 2.500 | 1/2 | 1 1/4 | 5/8 | 0.71 | CPL,CSP |
| WG1240 | 40 | 3.333 | 5/8 | 1 1/2 | 3/4 | 1.2 | CPL,CSP |
| WG1250 | 50 | 4.166 | 5/8 | 1 1/2 | 3/4 | 1.5 | CWE,CSP |
| WG1260 | 60 | 5.000 | 5/8 | 1 3/4 | 3/4 | 2.0 | CWE,CSP |
| WG1280 | 80 | 6.666 | 5/8 | 2 1/2 | 3/4 | 3.9 | CWE,CSP |
| WG12100 | 100 | 8.333 | 3/4 | 2 | 3/4 | 4.4 | CWE,CSP |

## 1 Double Steel -- 4°46' Helix Angle Worms

**W12-S**



CWE



CPL

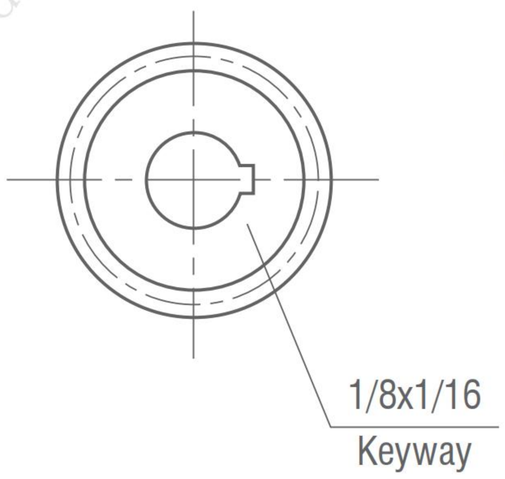


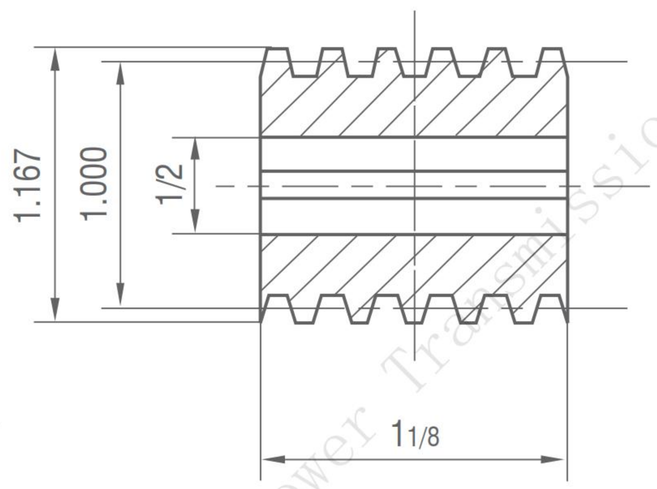

# Worm and Worm Gears

## 12DP

14 1/2° Pressure Angle

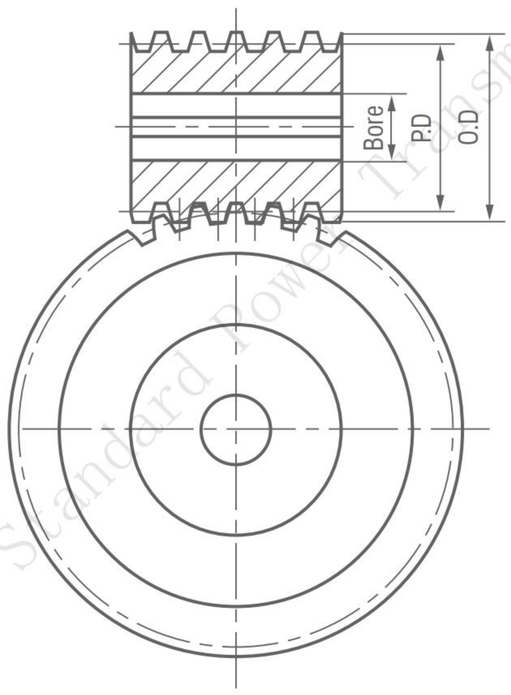


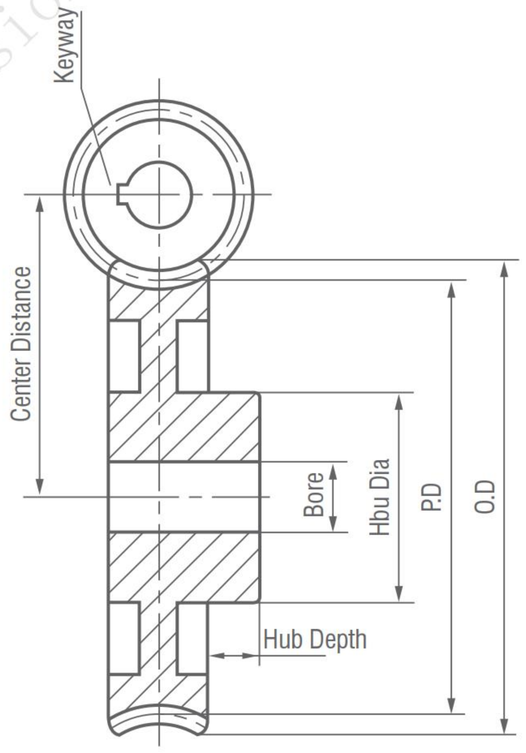




CSP

## Right Hand Double Thread -- Stocked Right Hand Only

### 12DP 1/2" Face — Cast Iron and Bronze

| PART NUMBER | Z | PD | Bore | Hub Dia | Hub Depth | wt Lbs | Style |
|---|---|---|---|---|---|---|---|
| WG1220D | 20 | 1.666 | 1/2 | 1 1/4 | 1/2 | 0.32 | CPL |
| WG1230D | 30 | 2.500 | 3/4 | 1 1/2 | 5/8 | 0.78 | CPL |
| WG1240D | 40 | 3.333 | 3/4 | 1 3/4 | 5/8 | 1.3 | CPL,CSP |

## 2 Double Steel -- 9° 28' Helix Angle Worms

### W12-D

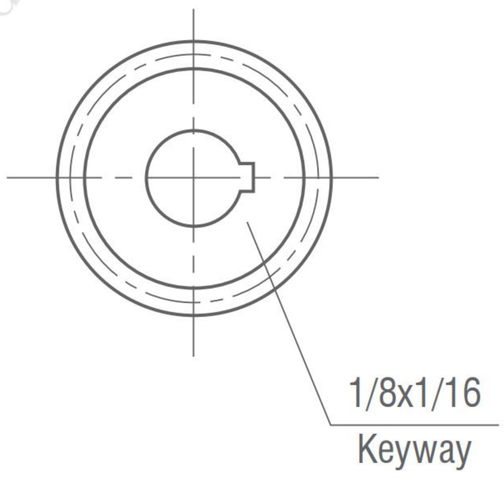


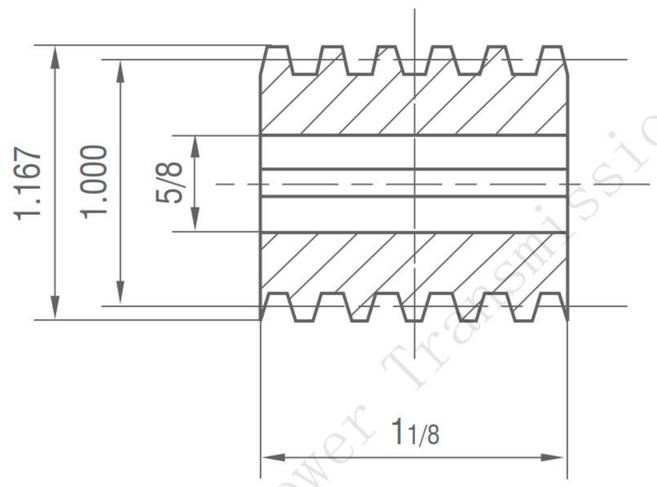




CWE



CPL

# Worm and Worm Gears

## 12DP

14 1/2° Pressure Angle

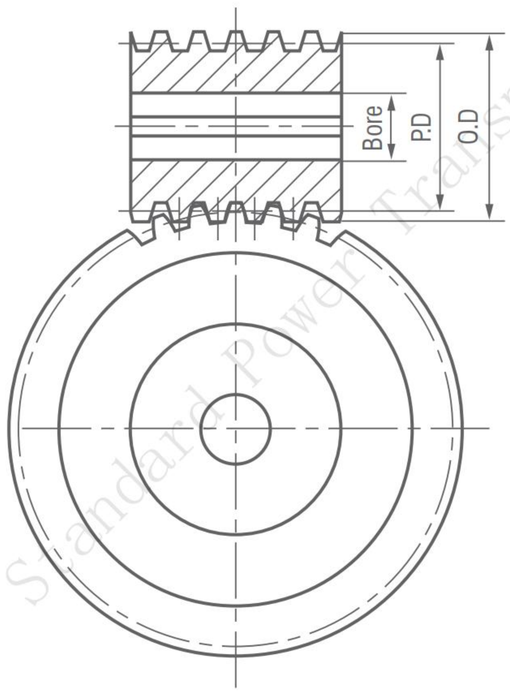


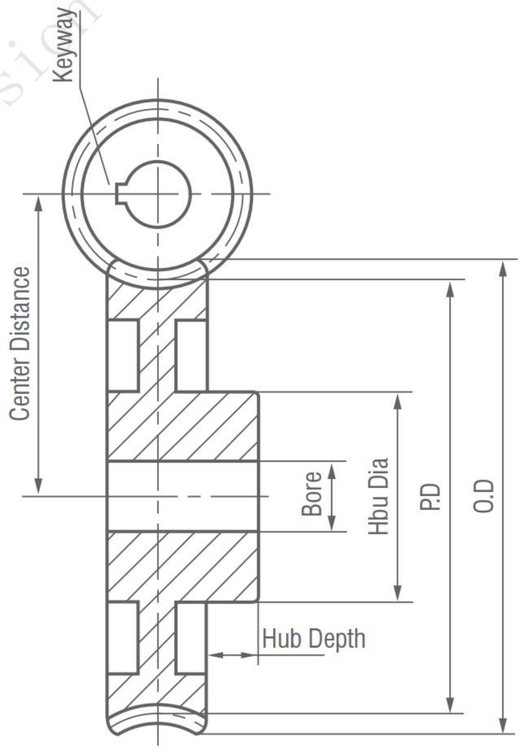




CSP

## Right Hand Quadruple Thread -- Stocked Right Hand Only

### 12DP 1/2" Face — Cast Iron and Bronze

| PART NUMBER | Z | PD | Bore | Hub Dia | Hub Depth | wt Lbs | Style |
|---|---|---|---|---|---|---|---|
| WG1220Q | 20 | 1.666 | 1/2 | 1 1/4 | 1/2 | 0.32 | CPL |
| WG1230Q | 30 | 2.500 | 3/4 | 1 1/2 | 5/8 | 0.38 | CPL |
| WG1240 | 40 | 3.333 | 3/4 | 1 3/4 | 5/8 | 0.80 | CPL,CSP |

## 4 Quadruple Steel -- 18 26' Helix Angle Woms

## W12-Q

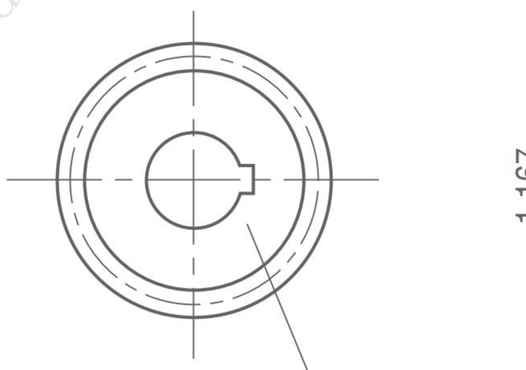


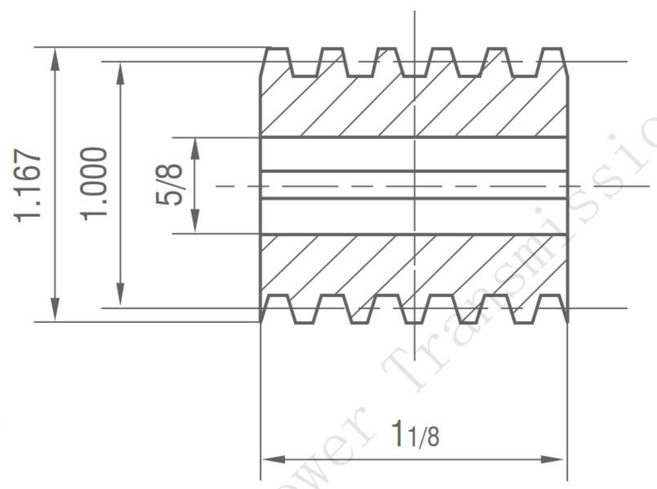




CWE



CPL

# Worm and Worm Gears

**16DP**

**14 1/2°** *Pressure Angle*

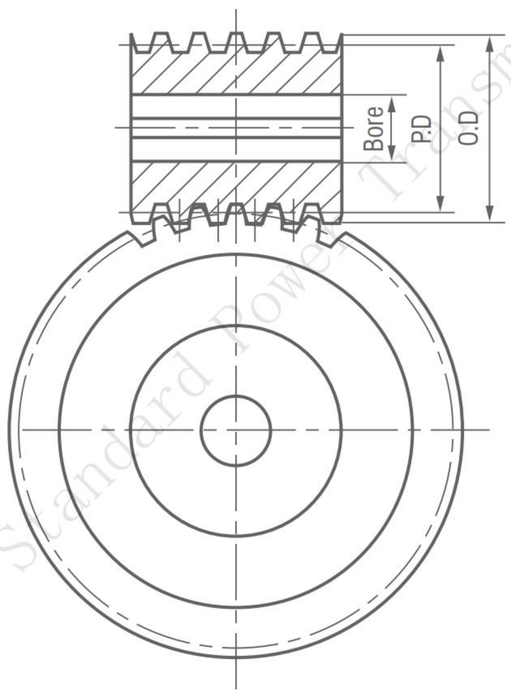


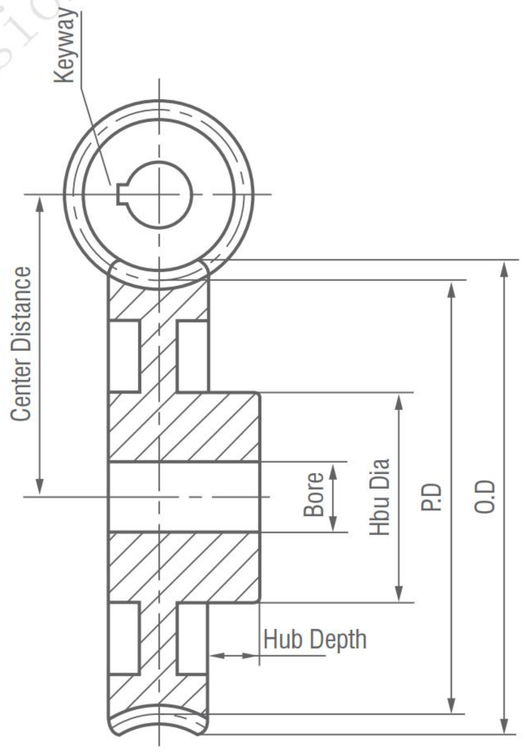




CSP

## Right Hand Single Thread -- Stocked Right Hand Only

### 16DP 5/16" Face — Cast Iron and Bronze

| PART NUMBER | Z | PD | Bore | Hub Dia | Hub Depth | wt Lbs | Style |
|---|---|---|---|---|---|---|---|
| WG1620 | 20 | 1.250 | 1/4 | 5/8 | 5/16 | 0.13 | CPL |
| WG1630 | 30 | 1.875 | 5/16 | 3/4 | 3/8 | 0.28 | CPL,CSP |
| WG1640 | 40 | 2.500 | 5/16 | 3/4 | 3/8 | 0.42 | CPL,CSP |
| WG1650 | 50 | 3.125 | 3/8 | 7/8 | 7/16 | 0.50 | CPL,CSP |

## 1 Single Steel -- 5° 43' Helix Angle Worms

**W16-S**

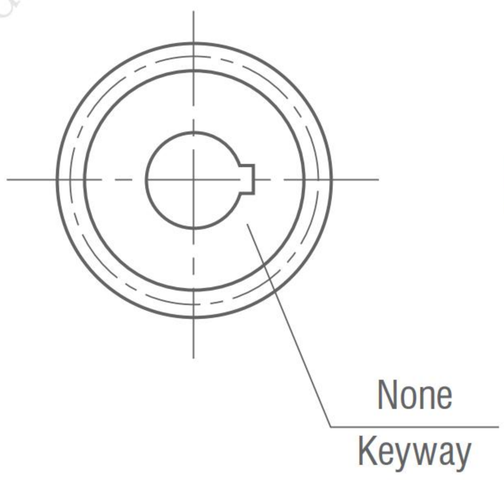


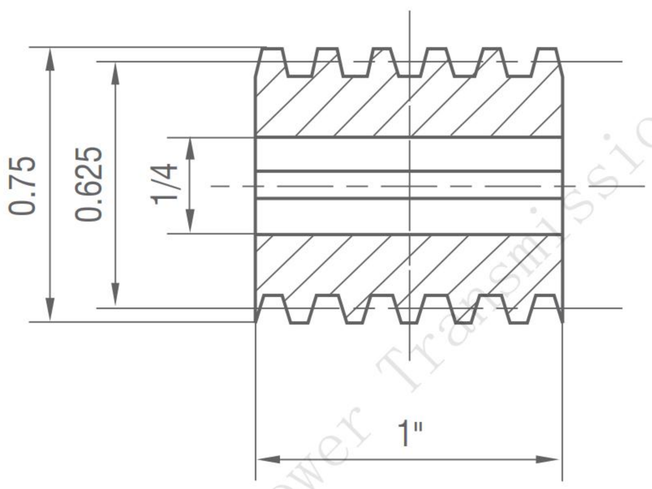




CWE



CPL

# Worm and Worm Gears

**16DP**

**14 1/2°** Pressure Angle

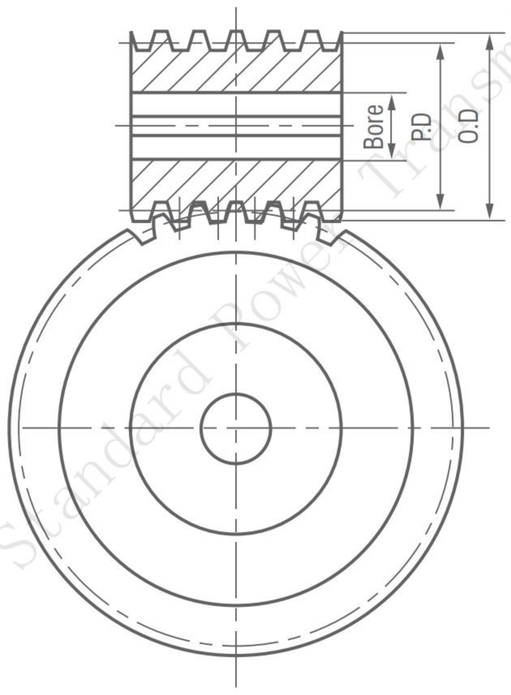


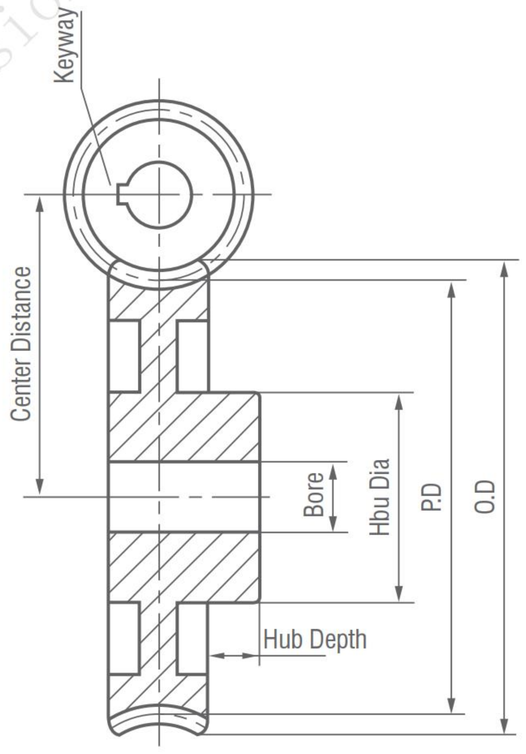




**CPL**

## Right Hand Double Thread -- Stocked Right Hand Only

**16DP** **5/16" Face** **Bronze**

| PART NUMBER | Z | PD | Bore | Hub Dia | Hub Depth | wt Lbs | Style |
|---|---|---|---|---|---|---|---|
| WG1620D | 20 | 1.250 | 1/4 | 5/8 | 5/16 | 0.14 | CPL |

**2 Double Steel -- 11° 19' Helix Angle Worm** **W16-D**

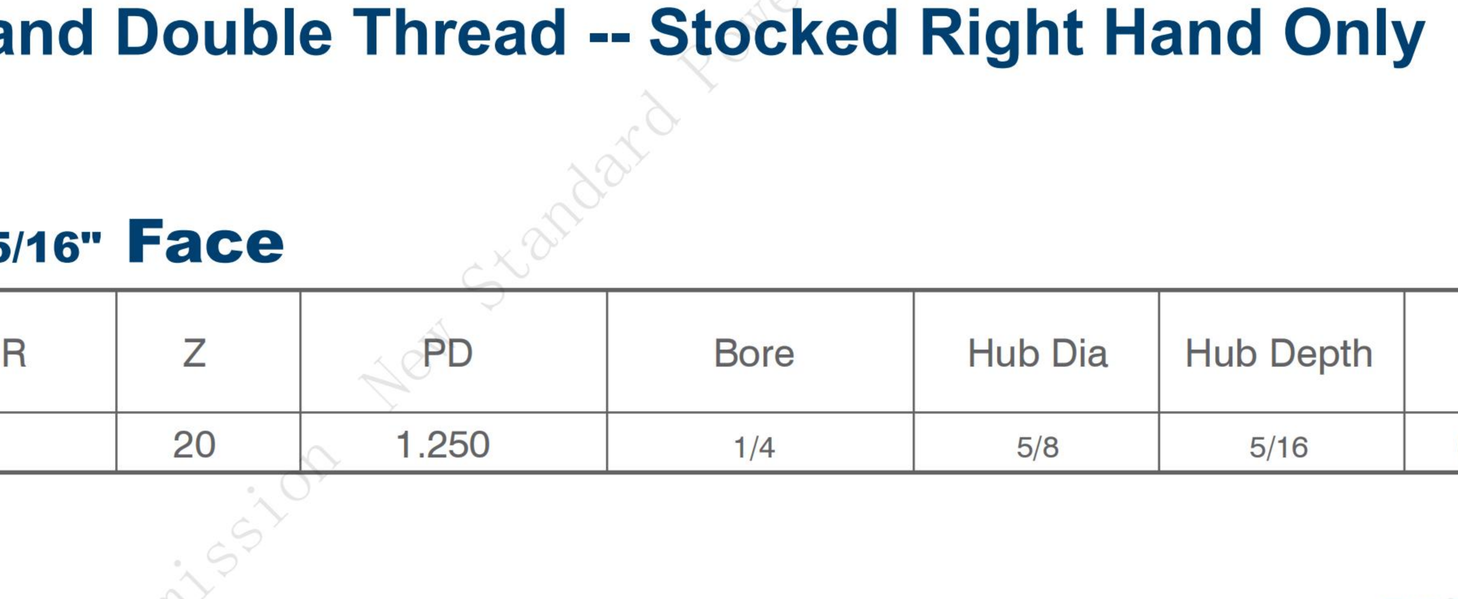

# Worm and Worm Gears

**16DP**

**14 1/2°** Pressure Angle

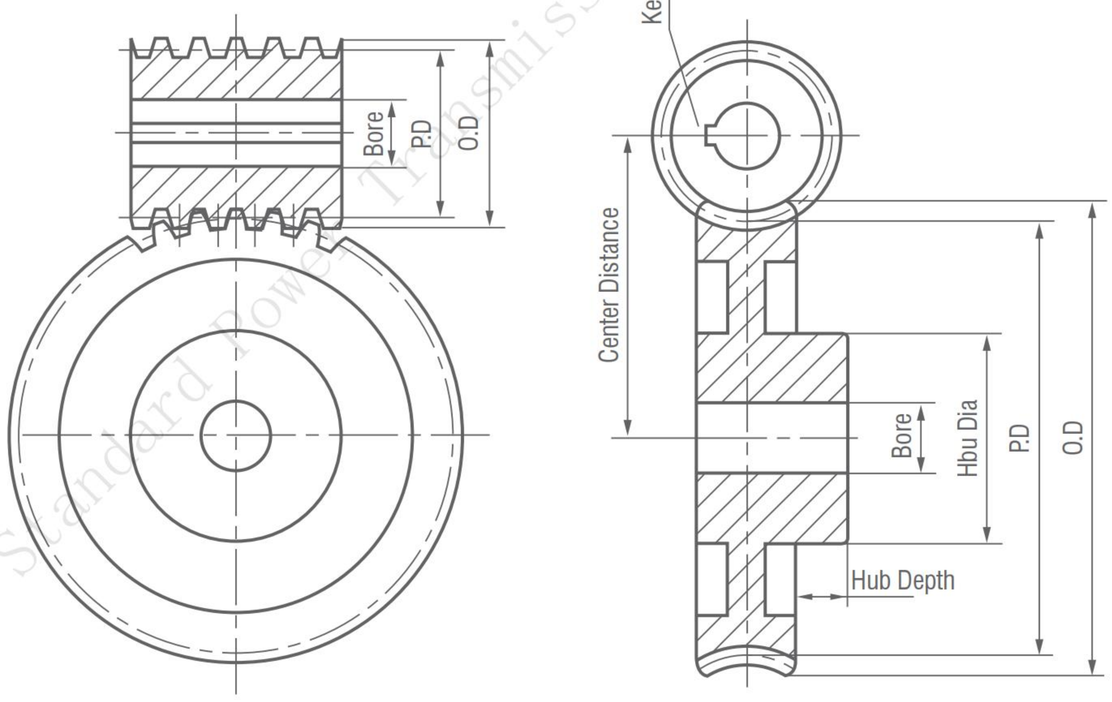




**CPL**

## Right Hand Quadruple Thread -- Stocked Right Hand Only

### 16DP 5/16" Face — Bronze

| PART NUMBER | Z | PD | Bore | Hub Dia | Hub Depth | wt Lbs | Style |
|---|---|---|---|---|---|---|---|
| WG1620 | 20 | 1.25 | 1/4 | 5/8 | 5/16 | 0.14 | CPL |

## 4 Double Steel -- 21 48' Helix Angle Worms **W16-Q**

